A Note From
Dave Miller (AA4DF) and Jill Bryant
at
http://www.aa4df.com

First, please know that we not only provide free PDFs like this one, we also supply PDF documents for profit. Please know that there is never an extraneous letter (like this one) added to PDFs we sell.

This TR-7800/7850 Service document is provided to you through the generosity of Steve, K7LZJ.

This PDF is made from a photostat copy of an original. The 600 dpi scans made from the copy are available on CD from our web site, as they are too large to transmit over FTP. We don't recommend them for higher quality, though, since readability doesn't perceptibly improve with them since the original source was a copy.

You will soon note that "marketing" and "leeching" vendors will soon be selling this scan on eBay. "The Leech" in Houston will say nothing about quality, and "The Marketer" in Minnesota will make up specifications to pretend he scanned it himself, as he does with so many HP factory downloads. Please support original PDF producers; "leeches" and "marketers" who obtain and sell the work of others or sell free internet download material to naïve eBay buyers for high prices are directly responsible for the scarcity of new material in the scanned manuals trade.

Also, PLEASE don't upload this to K4XL's BAMA! BAMA has plagiarized most of our Tektronix material, and if you investigate you'll see that they have a great deal more test equipment manual inventory than useful ham radio inventory (after all, test equipment docs are "where the money is") even though they masquerade as a ham radio site, and that coupled with the presence of the words "if you bought this from anyone other than BAMA…" locked into the material pretty well tells you what their intentions are. Wildly waving the "FREE! FREE! FREE!" banner they are tricking decent people into plagiarizing working vendors, with the ultimate objective being for BAMA to profit from the labor of others at no cost to themselves.

Otherwise, pass it around all you wish. Thanks for taking the time to read this.

-Dave and Jill
http://www.aa4df.com

3rd EDITION

P/A M57733 7800
P/A M57726 7850

KENWOOD

SERVICE MANUAL

Model TR-7800

CONTENTS

BLOCK DIAGRAM 2
CIRCUIT DESCRIPTION 3
OUTSIDE VIEWS 10
PC BOARD VIEWS
- Final Unit (X45-1150-10) 11
- PLL Unit (X50-1650-10) 11
- Control Unit (X53-1180-XX) 12
- Encoder Unit (X54-1500-10) 12
- LED PC Board 12
- DISPLAY Unit (X54-1510-10) 13
- RX Unit (X55-1270-XX) 14

PARTS LIST 15
KEY BOARD ASS'Y 20
PACKING, DISASSEMBLY 21
LEVEL DIAGRAM 24
ADJUSTMENTS 25
SCHEMATIC DIAGRAM 31
ABBREVIATIONS 32
REFERENCE DATA 34
SPECIFICATIONS 35

BLOCK DIAGRAM (K)

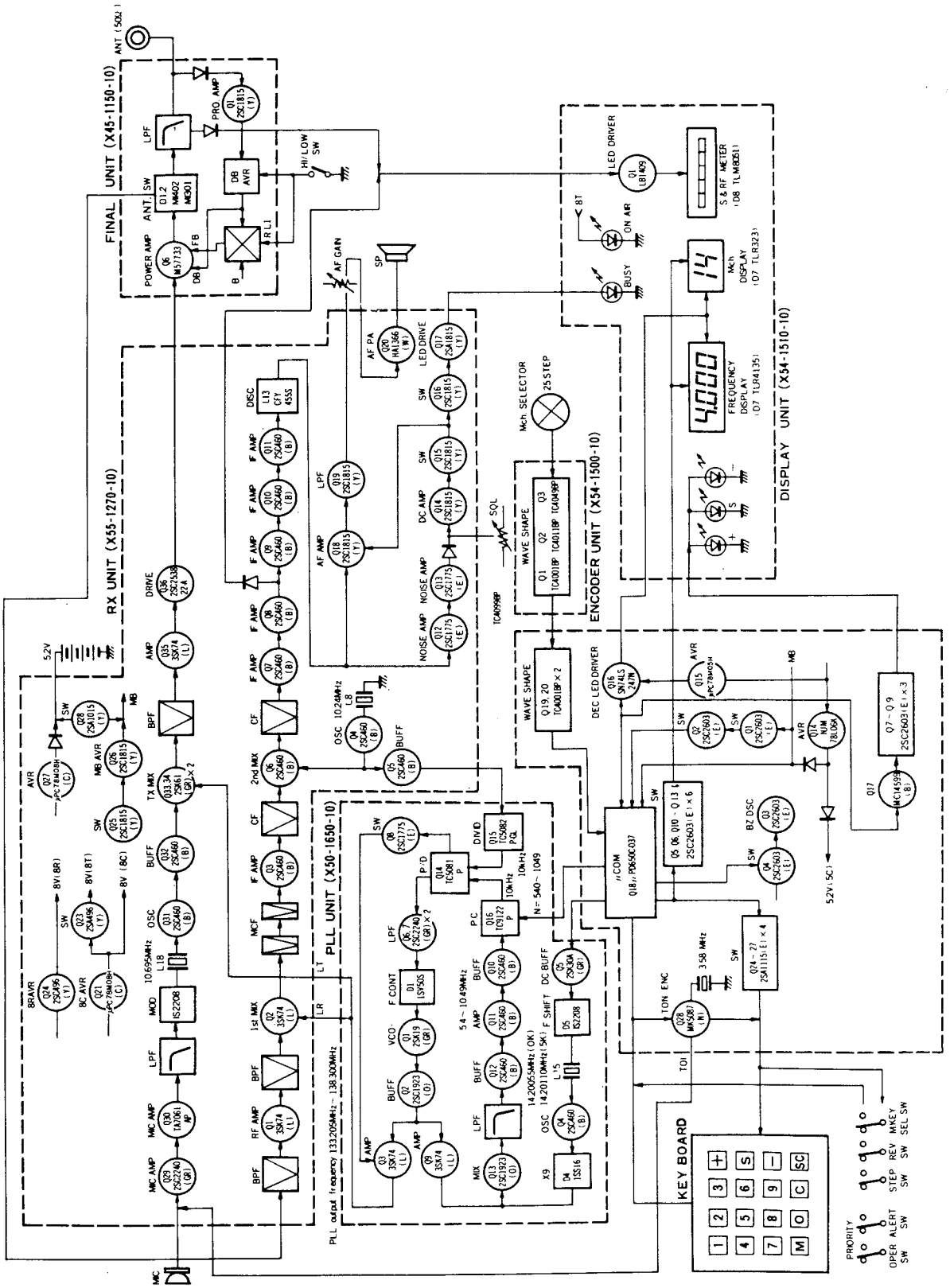

CIRCUIT DESCRIPTION

RX Section (X55-1270-10)

The RF signal amplified by the front end dual gate MOS FET Q1 is applied through the helical resonator L3 to Q2 to obtain a 10.695 MHz IF signal.

The output of Q2 passes through the 2-element MCF (monolithic crystal filter to provide an excellent 2-signal characteristic. The IF signal amplified by Q3 is applied to Q6 to produce the 455 kHz 2nd IF signal. This signal is then amplified by Q7-11 and is applied to the ceramic discriminator L13. The output from Q8 (455 kHz amplifier) is fed to the LED level meter for an S meter signal.

The squelch circuit, composed of Q12-15, controls the AF circuit Q18. The busy lamp drive signal and scan busy stop signal (SS) are produced by Q16 and 17 and fed to the busy lamp circuit on the display unit and the scan circuit on the control unit.

The AF signal is amplified by Q18. This is fed to the power amplifier Q20 through the active LPF (low pass filter) Q19 and the AF gain control.

Item	Symbol	Condition (Ta=25°C)	Rating			Unit
			MIN	TYP	MAX	
DC current with no input	Iq	Vin = 0	—	30.0	60.0	mA
Gain in voltage	Gv	Vin = −50 dB	50.0	52.5	55.0	dB
Output power	Po	THD = 10%	4.5	5.5	—	W
Distortion	THD	Po = 0.5W	—	—	1.5	%
Noise level	WBN	Rg = 10 kΩ, BW = 20 Hz ~ 20 kHz	—	—	2.0	mV
Hum ratio	HR	f = 500 Hz	28.0	—	—	dB
Voltage allowance with a shorted load		f = 500 Hz Vin = 10 mV, t = 5 sec.	16.0	—	—	V

Rank	1	2	3
Gv (dB)	50.0 ~ 52.2	51.4 ~ 53.6	52.8 ~ 55.0

Table 1. HA1366W (RX Unit: Q20)

Item	Rating
Nominal center frequency (fo)	10.695 MHz
Pass bandwidth	±7.5 kHz or more at 3 dB
Attenuation bandwidth	±25 kHz or less at 40 dB ±45 kHz or less at 60 dB
Guaranteed attenuation	1. 70 dB or more within ±1 MHz 2. Spurious level = 40 dB or more at fo ~ fo + 500 kHz 3. Spurious level = 80 dB or more at fo − (910 kHz ±10 kHz)
Ripple Loss	1.0 dB or less 1.5 dB or less
Impedance	3 kΩ/0 pF

Table 2. MCF (L71-0216-05) (RX Unit : XF1)

Item	Rating
Nominal center frequency	A: 10.7 MHz (RED) B: 10.67 MHz (BLUE) C: 10.73 MHz (ORANGE) D: 10.64 MHz (BLACK) E: 10.76 MHz (WHITE) — ±30 kHz
3 dB bandwidth	280±50 kHz
20 dB bandwidth	650 kHz or less
Ripple	0.5 dB or less
Loss	6 dB or less
Spurious response	30 dB or more at 9 ~ 12 MHz
Input and output impedance	330Ω

Table 3 Ceramic filter (L72-0014-05) SFE10.7MA5 (RX unit: L7)

Item	Rating
Nominal center frequency	455 kHz±1 kHz
6 dB bandwidth	±6 kHz or more
50 dB bandwidth	±12.5 kHz or less
Ripple (within 455 ±4 kHz)	3 dB or less
Loss	6 dB or less
Guaranteed attenuation (within 455±100 kHz)	35 dB or more
Input and output impedance	2.0 kΩ

Table 4. Ceramic filter (L72-0315-05) CFW455F (RX Unit: L10)

TX Section (X55-1270-10, X45-1150-10)

The microphone and Touch Tone signals are amplified by Q29 and fed to the FM modulator vari-cap diode D20 through the MIC amplifier Q30 and splatter filter to produce an FM signal. The 10.695 MHz signal from the oscillator circuit Q31 is applied to the transmit balanced mixer (Q33, Q34) via buffer amplifier Q32. The 144 MHz signal obtained from the balanced mixer is fed through the 4-stage BPF (with voltage variable tuning) to eliminate unwanted spurious components.

This signal is then amplified by Q35 and 36 to drive the final unit. Both Q36 and the Final unit are powered by the DB Line, which also functions at low power and during protection. The DB circuit is a 12.4V AVR (Automatic Voltage Regulator) circuit using Q2-5 and D5.

The signal to the Final unit is power amplified by the power hybrid Q6. It passes through the transmit/receive antenna switch diodes D1, D2, harmonics are eliminated by LPF (Low Pass Filter), and the signal is then applied to the ANT terminal.

The protection circuit is an automatic reset VSWR detector. DB voltage is dropped by driving Q1 with the reflected output component. Low power control is effected by RL1, which switches the power hybrid FB terminal over to the DB line. Power is reduced to 5W by controlling the DB line with VR4.

CIRCUIT DESCRIPTION

Item	Symbol	Tc (°C)	Rating
Operating voltage	Vcc	25	17V
DC current	Icc	25	6A
Operating case temperature	Tc (op)	–	−30 ~ +110°C
Storage temperature	Tstg	–	−40 ~ +110°C
Base bias voltage	VBB	25	10V

Table 5. Power module (V30-1171-60) M57733 MAX Rating (Final Unit : Q6)

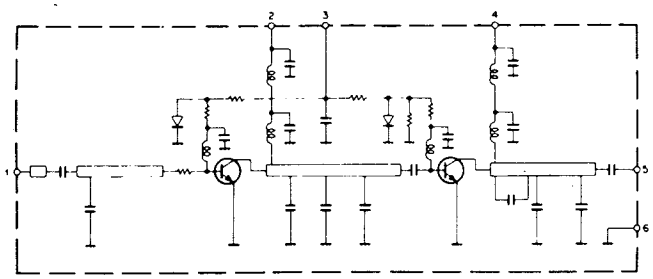

1 : INPUT
2 : Vcc_1
3 : BASE BIAS
4 : Vcc_2
5 : OUT
6 : GND

Fig. 1 Power module (V30-1171-60) Equivalent Circuit

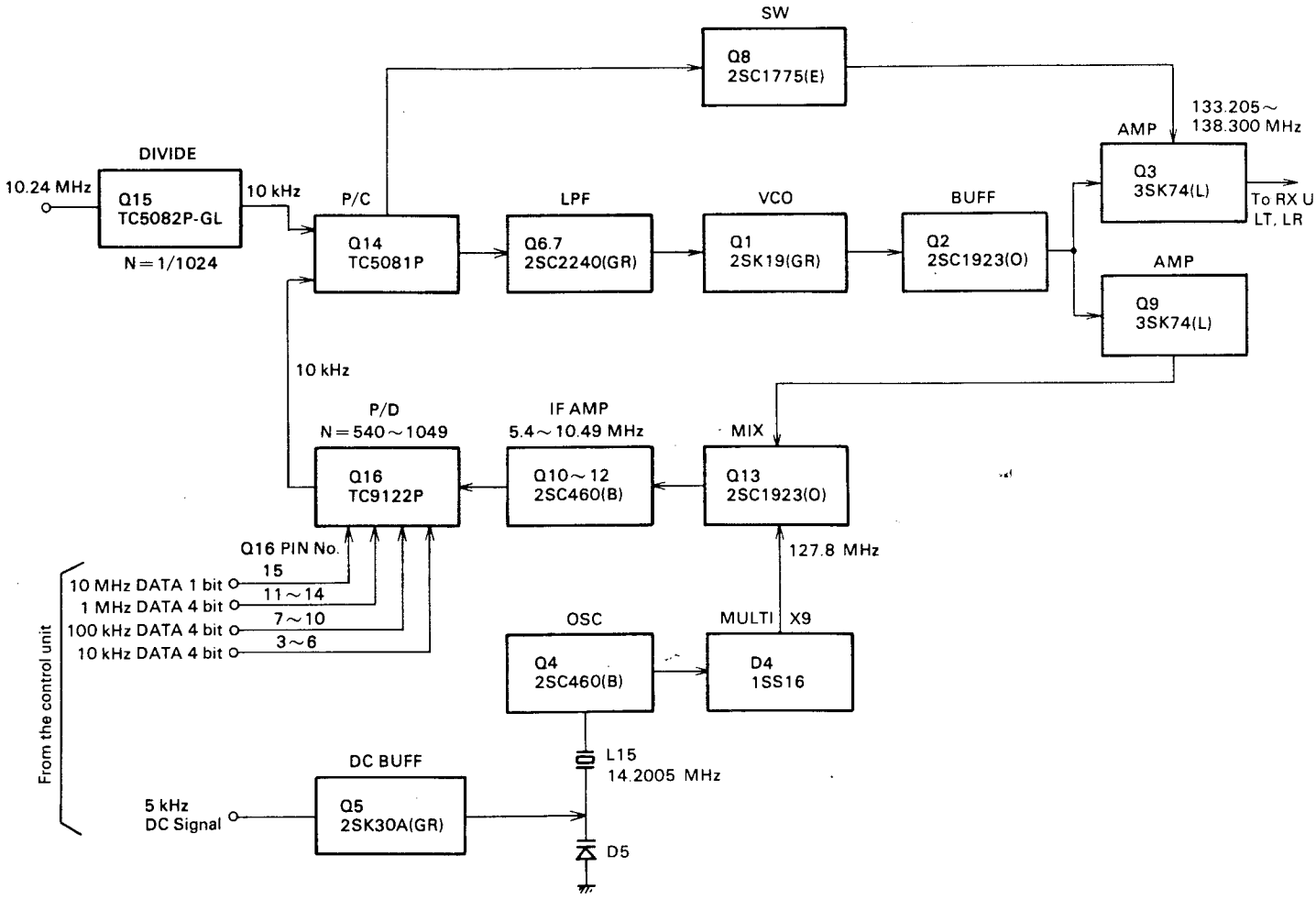

Fig. 2 PLL Unit (X50-1650-10) block diagram

CIRCUIT DESCRIPTION

S Meter Circuit (X54-1510-10)

The digital S meter circuit uses ICs and LEDs to indicate input signal strength.

When the receive signal is about 0 dBμ, the first LED will light. Refer to S meter sensitivity on page 33 for the signal level at which each LED lights. When the signal level is about 20-30 dB, all LEDs will light. In the transmit mode, 5 LEDs will light at "Hi" power, and 3 LEDs at "Low"power.

Backup Circuit (X55-1270-10)

1. Backup, power cord connected.
   When the power cable is connected to the vehicles battery, 13.8V is available at the BB terminal even at Power switch OFF; this AVR circuit (Q26, D16 and D17) supplies 5.2V to the MB terminal.
   When the Power switch is ON, Q26 is turned OFF by Q25 and memory power is available directly from the control unit.
2. Backup, power cable disconnected.
   With Ni-Cd cells installed in the battery case, Q28 is turned ON, and 5.2V is fed from the BT line through Q28 to the MB line. When the Power switch is ON, the 8V AVR circuit is activated by Q27 and the Ni-Cd's are charged through R94 and D19.
3. Backup Hold Time.
   1) During engine start-up, voltage at the battery terminal drops. C6 and C7 in the control unit afford about 1.5 sec of backup time.
   2) When the Ni-Cd batterie's are fully charged, the backup hold time is about 1 week max. And normally about 5 days.
   3) If backup greater than 1 week is required, 13.8V DC ±20% should be applied through the Ext. Backup terminal.

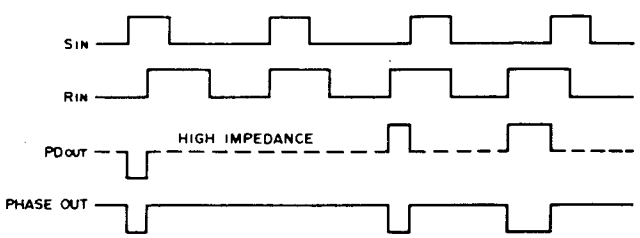

Fig. 3 TC5081P (PLL Unit : Q14)
Phase comparator timing chart

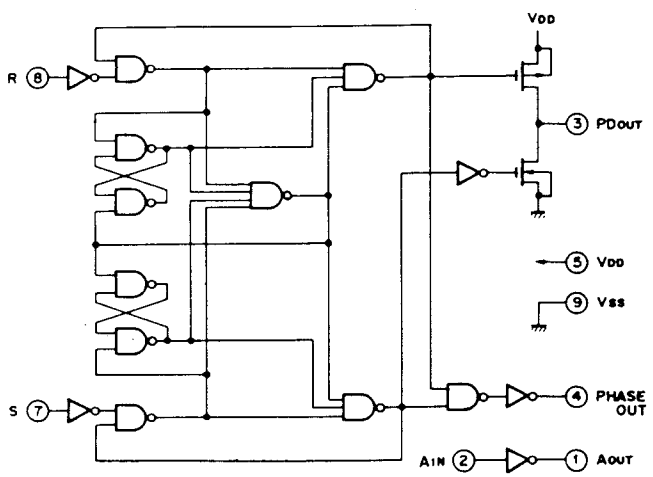

Fig. 4 TC5081P (PLL Unit : Q14)

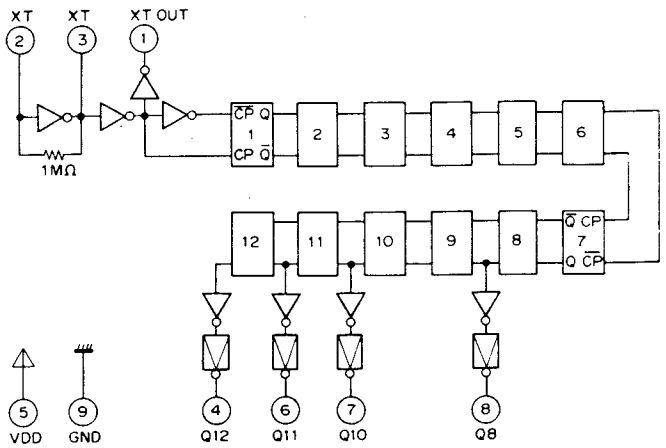

Fig. 5 TC5082P-GL (PLL UNIT: Q15)

PIN NO	8	7	6	4	1
PIN NAME	Q_8	Q_{10}	Q_{11}	Q_{12}	XT_{out}
Dividing ratio	1/256	1/1024	1/2048	1/4096	1/1
Output frequency X-tal 10.24 MHz	40 kHz	10 kHz	5 kHz	2.5 kHz	10.24 MHz

Table 6. TC5082P-GL (PLL Unit: Q15)

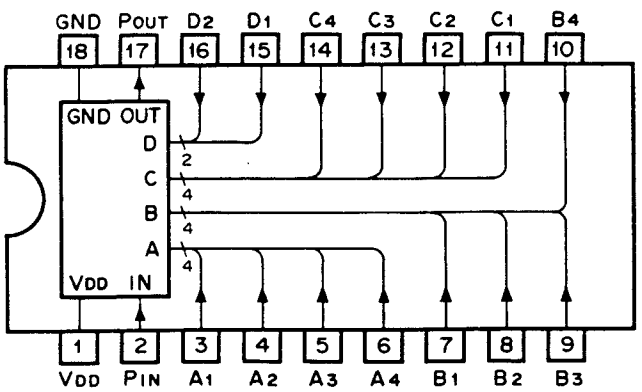

Fig. 6 TC9122P (PLL Unit : Q16)

Symbol	Name	Content and operation	Remarks
Pin	Programmable counter input terminal	Programmable counter input terminal to which the signal to be divided is input	Build-in bias circuit
Pout	Programmable counter output terminal	Programmable counter output terminal Output is 1/N of the input frequency The output pulse width equals 5 bit of the input	
$A_1 \sim A_4$ $B_1 \sim B_4$ $C_1 \sim C_4$ $D_1 \sim D_4$	× 1 × 10 Program input × 100 terminals × 1000	Terminal to set the dividing ratio The following input combination is prohibited.	Built-in pull-down resistor

A_1	A_2	A_3	A_4	B_1	B_2	B_3	B_4	C_1	C_2	C_3	C_4	D_1	D_2
1	0	0	0	0	0	0	0	0	0	0	0	0	0
0	1	0	0	0	0	0	0	0	0	0	0	0	0
1	1	0	0	0	0	0	0	0	0	0	0	0	0
0	0	1	0	0	0	0	0	0	0	0	0	0	0
1	0	1	0	0	0	0	0	0	0	0	0	0	0
0	1	1	0	0	0	0	0	0	0	0	0	0	0
1	1	1	0	0	0	0	0	0	0	0	0	0	0

Table 7. Functions of TC 9122P (PLL Unit : Q16)

CIRCUIT DESCRIPTION

Table. 8 Micro-Processor Functions (μPD650C-037 Control Unit, Q18)

Terminal No.	Name of terminal	Input signal	Output signal	Description	Pulse
1	CL1			Clock frequency ≒ 400 kHz	
2	PC0	○		Normal: L Transmit: H	
3	PC1	○		Squelch open: H Squelch OFF: L	
4	PC2		○	PO, PA, MR, ST common output CH display: 10-digit signal	○
5	PC3		○	Rev., TX OFFSET, 600/700 common output CH display: 1-digit signal	
6	$\overline{INT}$	○		Normal: H	
7	RES	○		Normal: L	
8	PD0		○	Display BCD output A: Latch address output A0	○
9	PD1		○	Display BCD output B: Latch address output A1	○
10	PD2		○	Display BCD output C: Latch address output A2	○
11	PD3		○	Display BCD output D: Latch data output D	○
12	PE0		○	Frequency display, 1 kHz digit: CL, 0, MW touch tone R4	○
13	PE1		○	Frequency display, 10 kHz digit: 7, 8, 9 touch tone R3	○
14	PE2		○	Frequency display, 100 kHz digit: 4, 5, 6 touch tone R2	○
15	PE3		○	Frequency display, 1 MHz digit: 1, 2, 3 scan touch tone R2	○
16	PF0		○	PLL data output, 10 kHz digit: L at 146.000	
17	PF1		○	PLL data output, 10 kHz digit: L at 146.000	
18	PF2		○	PLL data output, 10 kHz digit: L at 146.000	
19	PF3		○	PLL data output, 10 kHz digit: L at 146.000	
20	TEST			Power supply, 5V	
21	VCC			Power supply, 5V	
22	PG0		○	PLL data output, 100 kHz digit: H at 146.000	
23	PG1		○	PLL data output, 100 kHz digit: L at 146.000	
24	PG2		○	PLL data output, 100 kHz digit: H at 146.000	
25	PG3		○	PLL data output, 100 kHz digit: L at 146.000	
26	PH0		○	PLL data output, 1 MHz digit: H at 146.000	
27	PH1		○	PLL data output, 1MHz digit: H at 146.000	
28	PH2		○	PLL data output, 1 MHz digit: H at 146.000	
29	PH3		○	PLL data output, 1 MHz digit: L at 146.000	
30	PI0		○	PLL data output, 5 kHz	
31	PI1		○	PLL data output, 10 MHz	
32	PI2		○	Latch timing pulse output	○
33	PA0	○		Rotary encoder UP input	○
34	PA1	○		Rotary encoder DOWN input	○
35	PA2	○		MIC UP input; UP at L, Stops when both are L	
36	PA3	○		MIC DOWN input; DOWN at L, Stops when both are L	
37	PB0	○		700 at H of 600/700 selector, C3 5 kHz at H of step selector, C2 Scan input E3 Destination E0 | 1 | 0 | 1, 0 E1 | 1 | 1 | 0, 0 | K | X | W	
38	PB1	○		Reverse input C3, MW input E0: MR input C2 7E1, 4E2, 1E3, touch tone B1	
39	PB2	○		⊖ shift input C3: P.O input, C2 0E0, 8E1, 5E2, 2E3: Touch tone B2	
40	PB3	○		⊕ shift input C3, touch tone B3: P.A input C2 CL, E0, 9E1, 6E2, 3E3: Simplex input C3 (common to B2)	
41	VSS			Earth (Ground)	
42	CL			Clock frequency ≒ 400 kHz	

PLL Unit (X50-1650-10)

Fig. 2 shows a basic block diagram of the PLL circuit. The VCO signal from Q1 is buffered by Q2 and amplified by Q9. It is then mixed with the heterodyne signal by Q13 to produce a 5.4 — 10.49 MHz signal.

This signal is filtered and then amplified by Q12-10, and then frequency divided by Q16 according to the binary data (10 MHz, 1 MHz, 100 kHz and 10 kHz order) from the control unit to obtain a 10 kHz step signal.

The 10.24 MHz signal from the RX unit is frequency divided 1/1024 by Q15 to a 10 kHz reference signal is then phase detected by Q14. This signal, through low pass filters Q6 and Q7, is applied via the CV line to the vari-cap diodes D21-24 in the RX unit as a control voltage. In the VCO HET circuit, a 14.2 MHz crystal controlled signal is generated by OSC Q4, and is multiplied 9X by D4 to obtain 127.8 MHz signal, which is applied to the mixer Q13.

Vari-cap D5 in the crystal oscillator circuit shifts the oscillator frequency + 5 kHz through the Q5 source voltage variation, derived from the control unit 5 kHz DC signal.

CIRCUIT DESCRIPTION

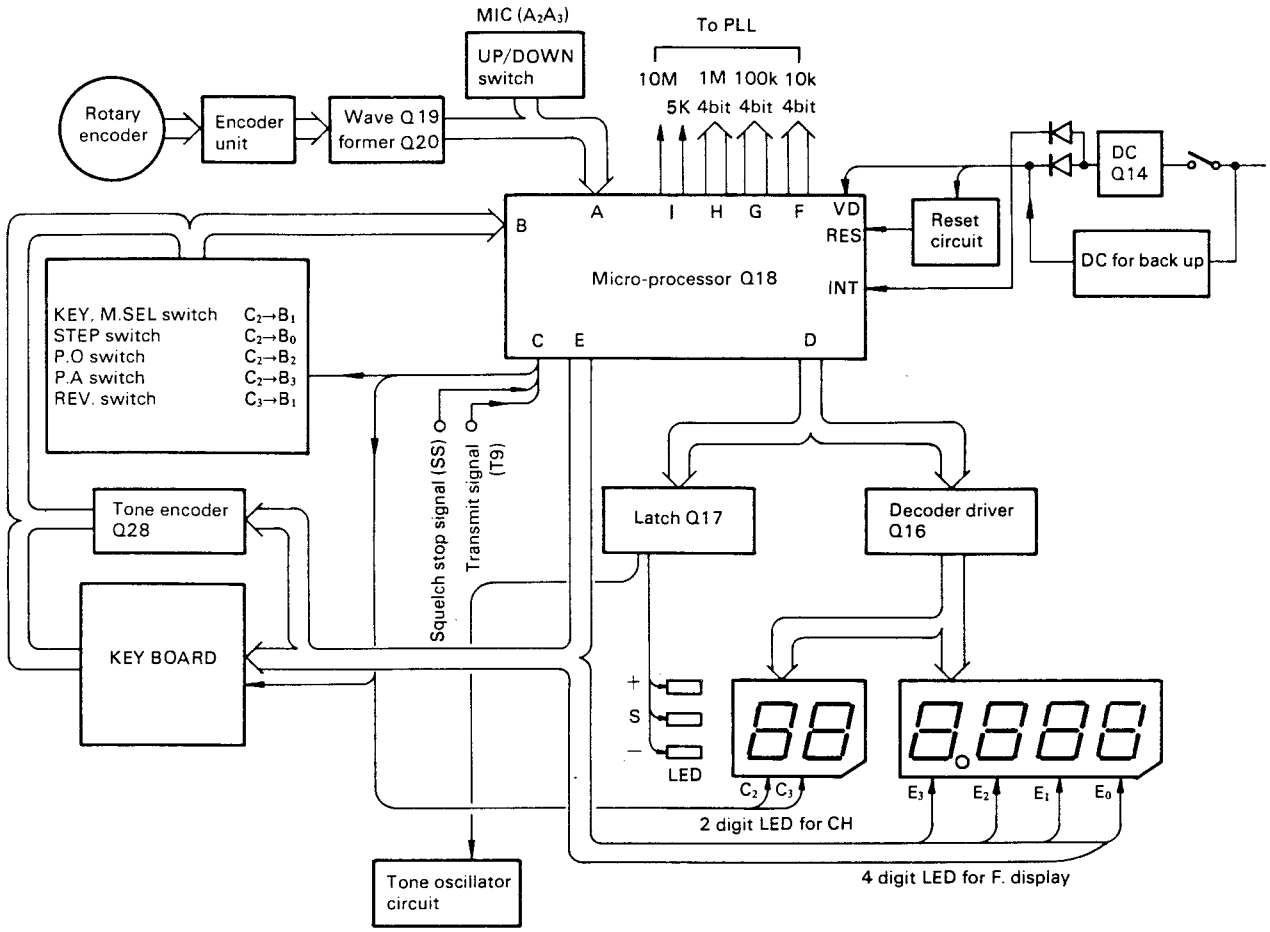

Fig. 7 Control Unit block diagram

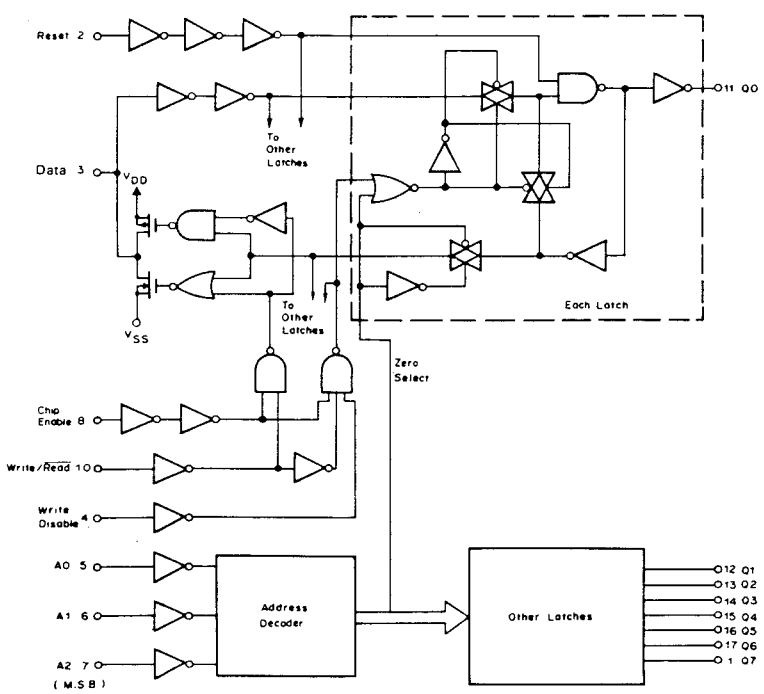

Fig. 8 Function diagram of MC14599B (Control Unit: Q17)

TRUTH TABLE

Chip Enable	Write/ Read	Write Disable	Reset	Addressed Latch	Other Latches	Data Pin
0	×	×	0	•	•	Z
1	1	0	0	Data	•	Input
1	1	1	0	•	•	Z
1	0	×	0	•	•	Qn
×	×	×	1	0	0	Z/0

× = Don't care.
• = No change in state of latch.
Z = High impedance.
Qn = State of addressed latch.

Table 9. Truth table (Control Unit: Q17)

CIRCUIT DESCRIPTION

Table 10. Control Unit Q16 (SN74LS247N) function

DECIMAL OR FUNCTION	INPUTS LT	RBI	D	C	B	A	BI/RBO	OUTPUTS a	b	c	d	e	f	g
0	H	H	L	L	L	L	H	ON	ON	ON	ON	ON	ON	OFF
1	H	X	L	L	L	H	H	OFF	ON	ON	OFF	OFF	OFF	OFF
2	H	X	L	L	H	L	H	ON	ON	OFF	ON	ON	OFF	ON
3	H	X	L	L	H	H	H	ON	ON	ON	ON	OFF	OFF	ON
4	H	X	L	H	L	L	H	OFE	ON	ON	OFF	OFF	ON	ON
5	H	X	L	H	L	H	H	ON	OFF	ON	ON	OFF	ON	ON
6	H	X	L	H	H	L	H	ON	OFF	ON	ON	ON	ON	ON
7	H	X	L	H	H	H	H	ON	ON	ON	OFF	OFF	OFF	OFF
8	H	X	H	L	L	L	H	ON	ON	ON	ON	ON	ON	ON
9	H	X	H	L	L	H	H	ON	ON	ON	ON	OFF	ON	ON
10	H	X	H	L	H	L	H	OFF	OFF	OFF	ON	ON	OFF	ON
11	H	X	H	L	H	H	H	OFF	OFF	ON	ON	OFF	OFF	ON
12	H	X	H	H	L	L	H	OFF	ON	OFF	OFF	OFF	ON	ON
13	H	X	H	H	L	H	H	ON	OFF	OFF	ON	OFF	ON	ON
14	H	X	H	H	H	L	H	OFF	OFF	OFF	ON	ON	ON	ON
15	H	X	H	H	H	H	H	OFF	OFF	OFF	OFF	OFF	OFF	OFF
BI	X	X	X	X	X	X	L	OFF	OFF	OFF	OFF	OFF	OFF	OFF
RBI	H	L	L	L	L	L	L	OFF	OFF	OFF	OFF	OFF	OFF	OFF
LT	L	X	X	X	X	X	H	ON	ON	ON	ON	ON	ON	ON

MK5087 (N) (Control Unit Q28)

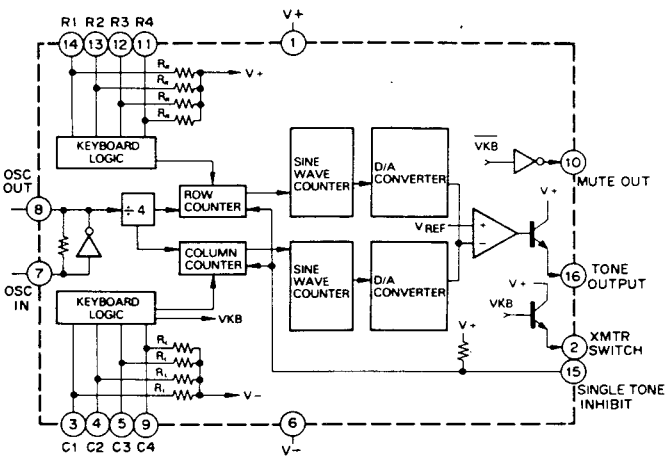

Fig. 9

Control Unit (X53-1180-10)

The Control unit has an LED dynamic display to indicate frequency in 4 digits and storage channels in 2 digits. The BCD (Binary Coded Decimal) data in the micro-computer D port (pins 8-11) are converted into 7-segment data by the decoder driver Q16. Frequencies are displayed by the E port (pins 12-15), and channels by the C2 and C3 ports (Pins 4, 5), switching Q10-Q13 and Q5-Q6. TX OFFSET is displayed when the dynamic data from the D port is latched by Q17. The display lights in static mode through Q7-Q9.

- PLL Data Output
  The BCD codes for 10k, 100k and MHz are output from the F, G, and H ports (pins 16-19, 22-29) as PLL data output. The Io port is 5k/bit and the I1 port is 10M/bit. The data in the 12-F0 are 0550 for 4000, 0551 for 4010, 0650 for 5000.
- Reset Circuit
  The reset circuit is a voltage detector. When the voltage exceeds about 3.5V, Q1 is ON and Q2 is OFF, thereby applying pulses to Q18 pin 7 through the differentiation circuit C10 and R5 to reset the circuit.
- Tone Oscillator Circuit
  When the latch Q17 pin 17 goes H, Q4 turns ON to activate the tone generator.
- Switch Circuits
  Each switch functions when dynamic pulses from the micro-computer are input. Diodes are used to prevent reverse current flow.
- Power Supply Circuits
  The micro-computer power supply is Q14, a 6V AVR. Diode D3 provides reverse flow protection. Display power is Q15, a 5V AVR.

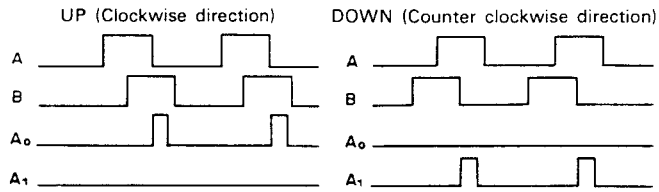

Fig. 10 Encoder input timing chart

- Encoder Input
  The encoder (25 clicks/turn) is a mechanical ON/OFF switch having a phase difference. The encoder circuit, Q19 and Q20 are used to prevent chatter and to shape waveform. A right turn inputs pulses to the Ao port (pin 33), and a left turn to the A1 port (pin 34).
- UP/DOWN
  The micro-computer UP/DOWN inputs A2 (pin 35) and A3 (pin 36) are connected to the microphone switches and are normally H. The UP/DOWN function is effected at L.

Table 11.

	697 Hz	770 Hz	852 Hz
1209 Hz	1	2	3
1336 Hz	4	5	6
1477 Hz	7	8	9
1633 Hz	M *	0	C #

- Tone Encoder Circuit
  In transmit mode, Q28 MK5078N is operated by the 8T (power) line. Q24-Q27 are OFF so the pulse signal from the micro-computer Q18 is cut off. By pressing buttons 1-9, O, C and M on the key board, the logical level is inverted; Q28 3-5 becomes L and 11-14 becomes H to produce 2-tone output at pin 16. Tone output deviation is adjustable by VR1. Table 11 shows the frequencies of the two signals.
- Backup Circuit
  When the power cable is connected to the power supply or batteries are installed, the CB line is at 0V and the MB line is 5V at the power switch OFF position. Pins 6 and 35 of micro-processor Q18 (μPD650C-037) are switched from H to L, thereby operating the backup circuit. At this time, all terminals of Q18 are set to L except for pins 1, 20, 21, 42. The backup function is reset when pin 35 becomes H.

Encoder Unit (X54-1500-10)

The memory channel selector (25 clicks/turn) is a mechanical ON/OFF switch which phase inverts according to the direction of rotation. It is a Schmidt circuit using Q3 (6 inverter gates) to waveform shape the pulses at terminals EA and ED.

By using Q2 (4 NAND gates) and Q1 (4 NOR gates), the rising and falling portions of the pulse are detected and fed to the terminals A, B, C and D. The signal is applied to Q19 of the control unit to separate the pulse by the rotational direction. The separated pulse width is set to about 3m sec by the one shot circuit Q20 to input the signal to the micro-processor Q18.

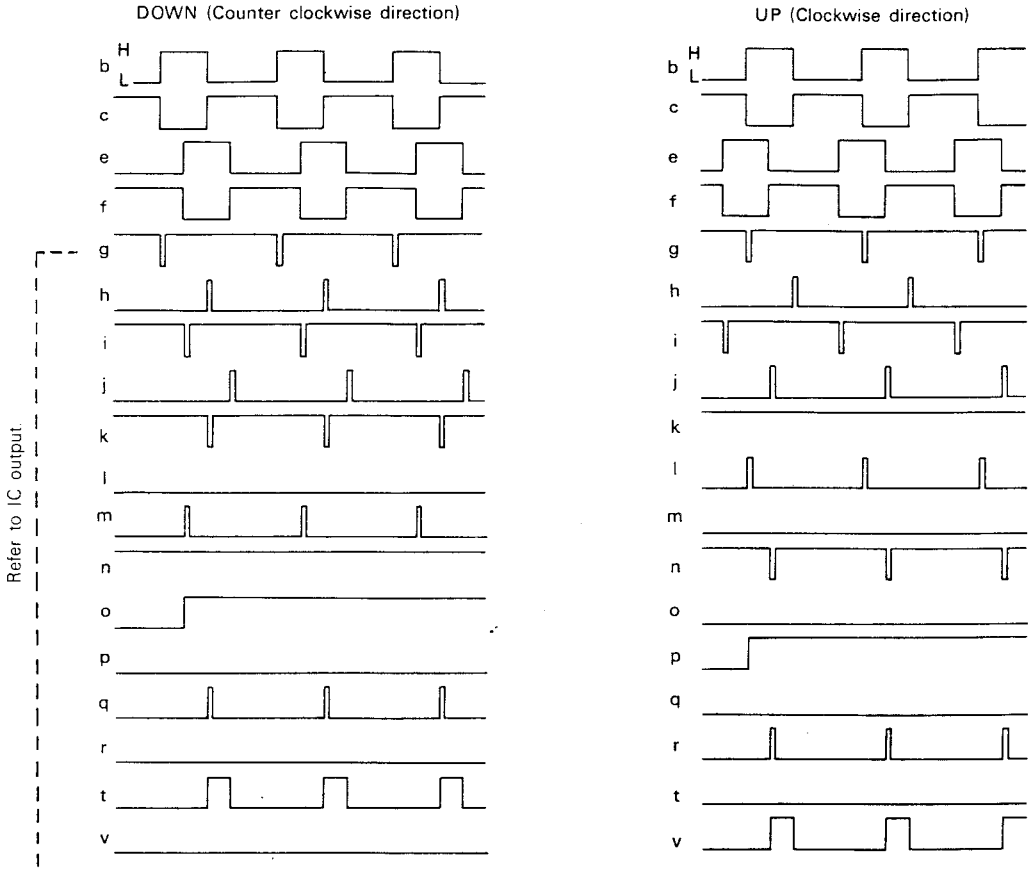

Fig. 11 Encoder Unit timing chart

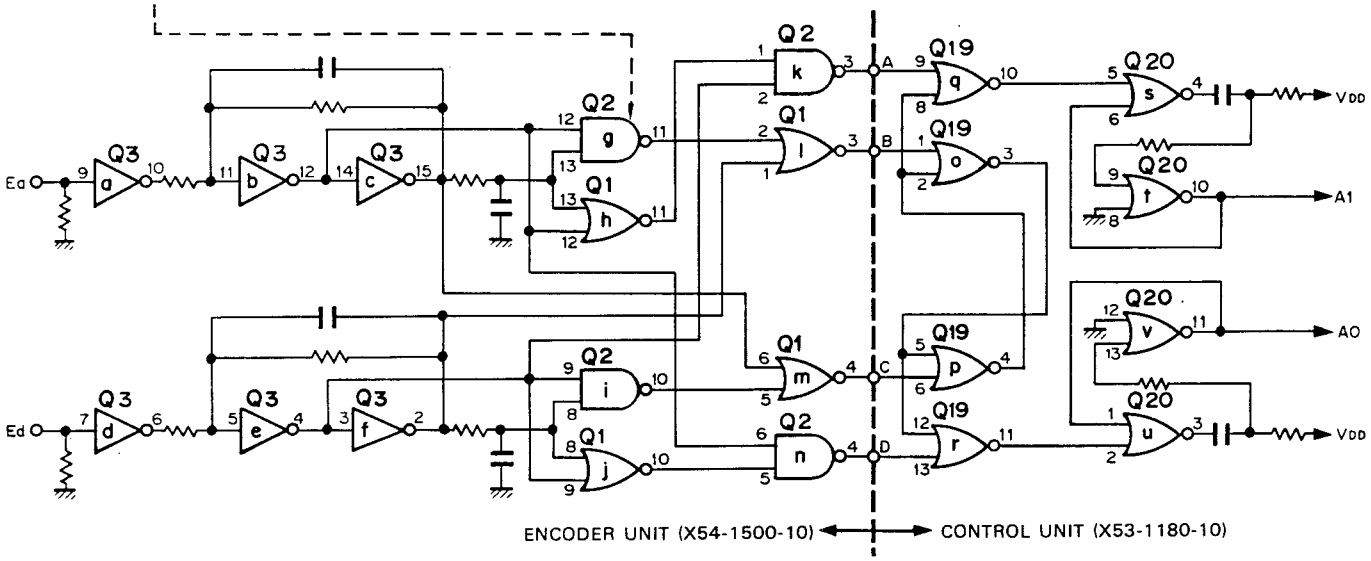

Fig. 12 Encoder, Control Unit circuit diagram

OUTSIDE VIEWS

<FRONT PANEL>

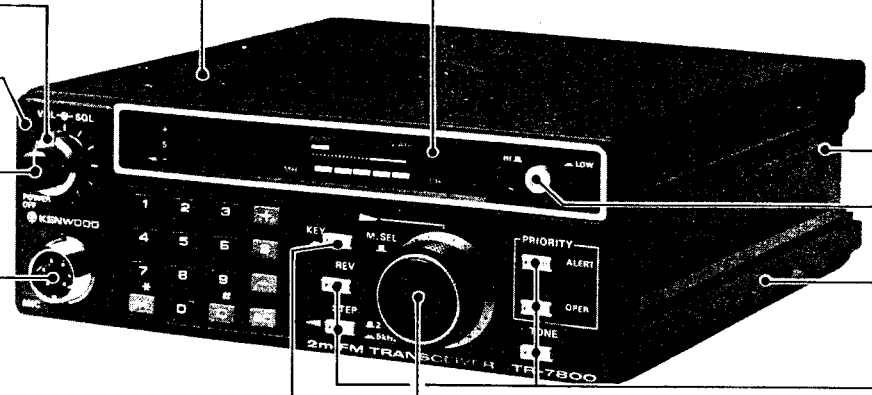

<REAR PANEL>

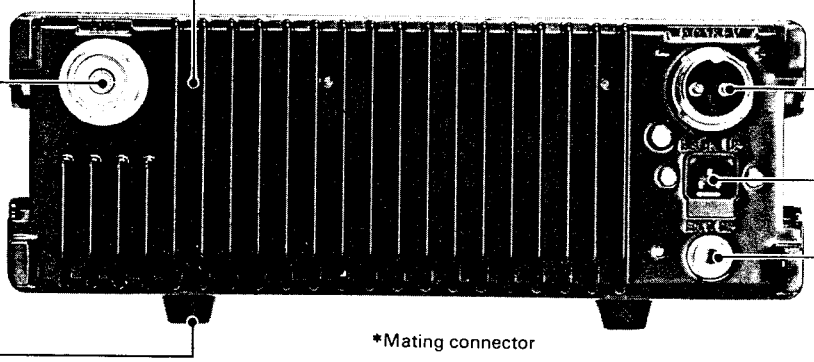

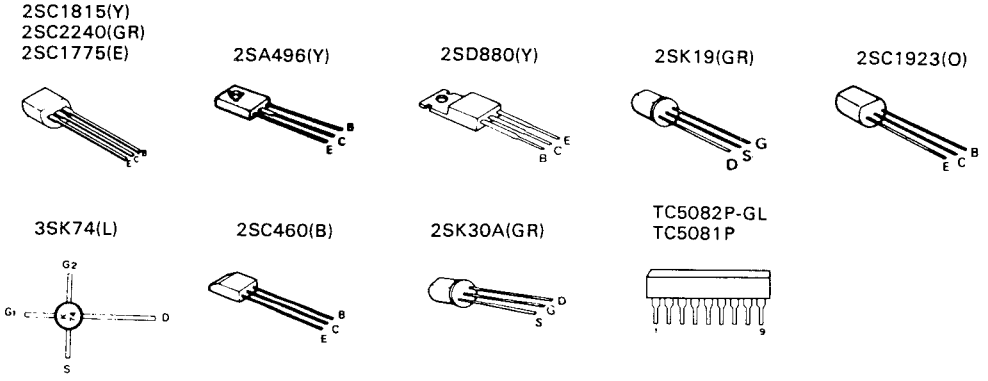

PC BOARD VIEWS

▼ FINAL UNIT (X45-1150-10) Parts list: Page 16

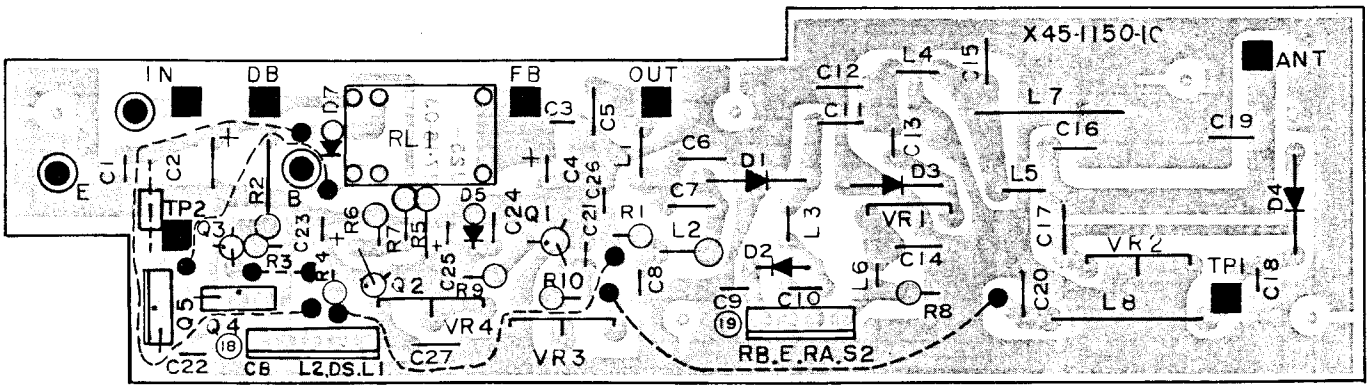

<Wiring on the Heat Sink>

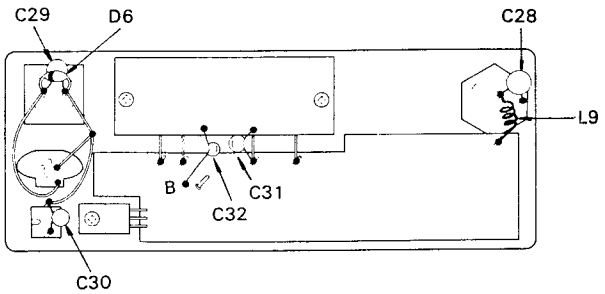

Note:
1. Solder the leads of the power module without applying stress to them.
2. Install C28 and L9 as short as possible.

Q1~3:2SC1815(Y) Q4:2SA496(Y) Q5:2SD880(Y)
Q6:M57733 D1:MI402 D2:MI-303 D3,4:IN60
D5:XZ-064 D6:U15B D7:1S1555

NOTES:
All printed circuit views are component side.

[Transistor Terminal Indication]

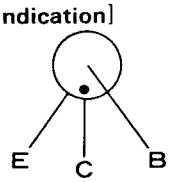

<Attachment method of L15>

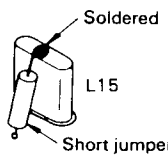

<Attachment direction of TC1 and L2>

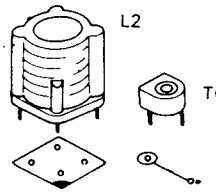

▼ PLL UNIT (X50-1650-10) Parts list: Page 17

Q1:2SK19(GR) TRIO-5 Q2,13:2SC1923(O) Q3,9:3SK74(L) Q4,10~12:2SC460(B)
Q5:2SK30A(GR) Q6,7:2SC2240(GR) Q8:2SC1775(E) Q14:TC5081P Q15:TC5082P-GL
Q16:TC9122P D1:1SV50S D2,3:1S2588 D4:1SS16 D5:1S2208

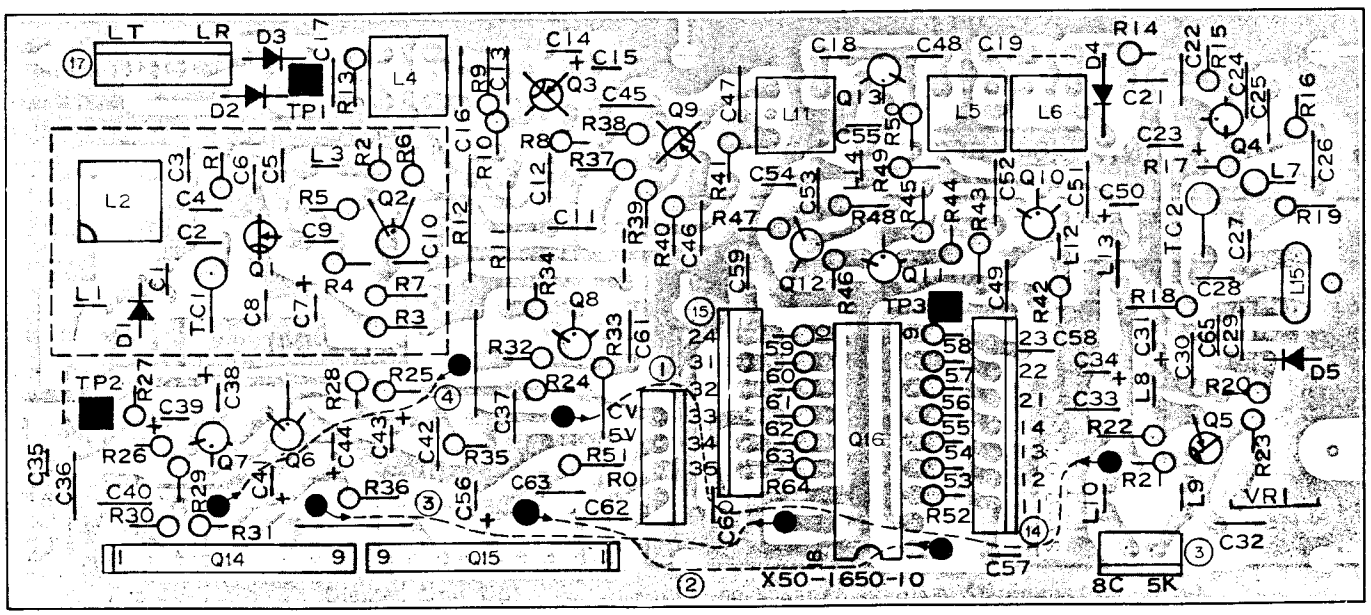

PC BOARD VIEWS

▼ CONTROL UNIT (X53-1180-XX) XX: 10(K), 61(W)(T) Parts list: Page 17

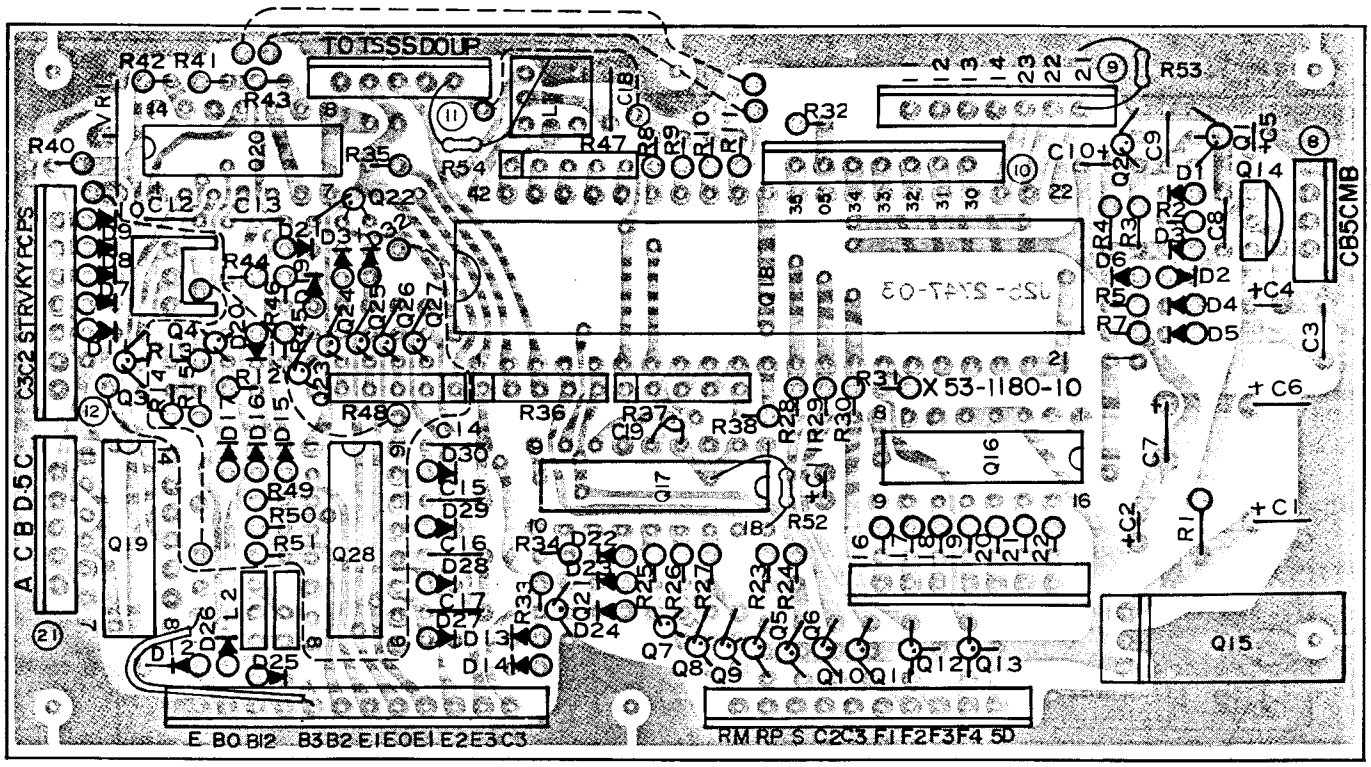

Q1～13,21～23:2SC2603(E) Q14:NJM78L06K Q15:μPC78M05H Q16:SN74LS247N
Q17:MC14599B Q18:μPD650C-037 Q19,20:TC4001BP Q24～27:2SA1115(E) (K)
Q28:MK5087N (K) D1:XZ-060 D2～11,13～17,19～24:1S1555 D12,25,26:1N60
D27～32:1S1555 (K) D33～36:1S1555 (W)

2SC2603(E)
2SA1115(E)

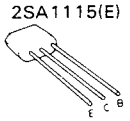

<Attachment method of the transducer>

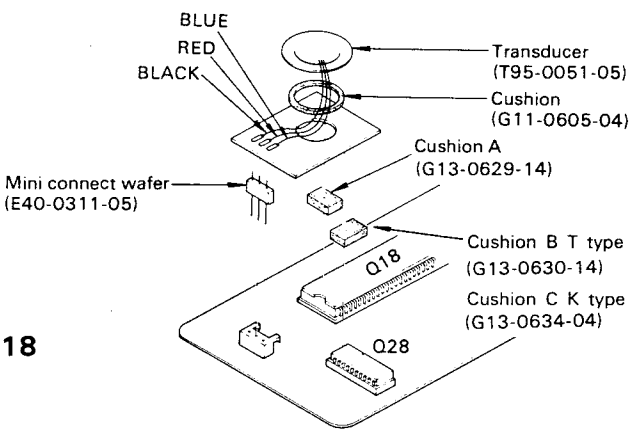

▼ ENCODER UNIT (X54-1500-10) (arts list: Page 18

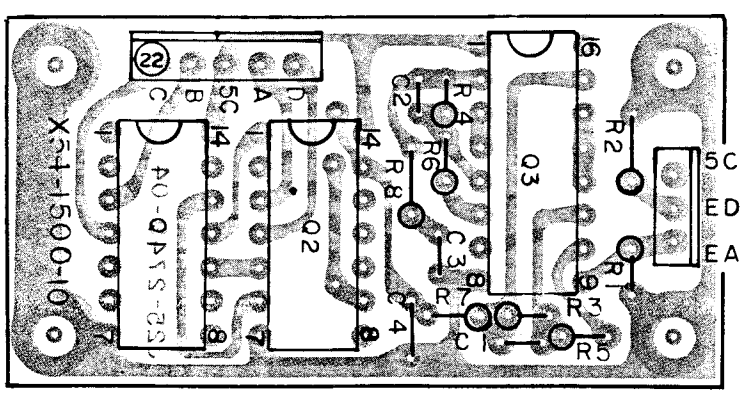

Q1:TC4001BP Q2:TC4011BP Q3:TC4049BP

▼ LED (J25-2752-04)

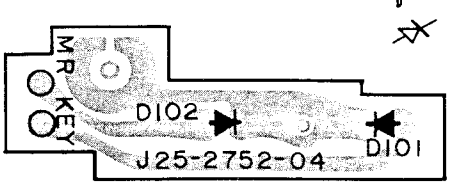

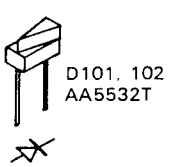

D101,102: AA5532T

PC BOARD VIEW/IC.LED DATA

▶ DISPLAY UNIT (X54-1510-10) Parts list: Page 18

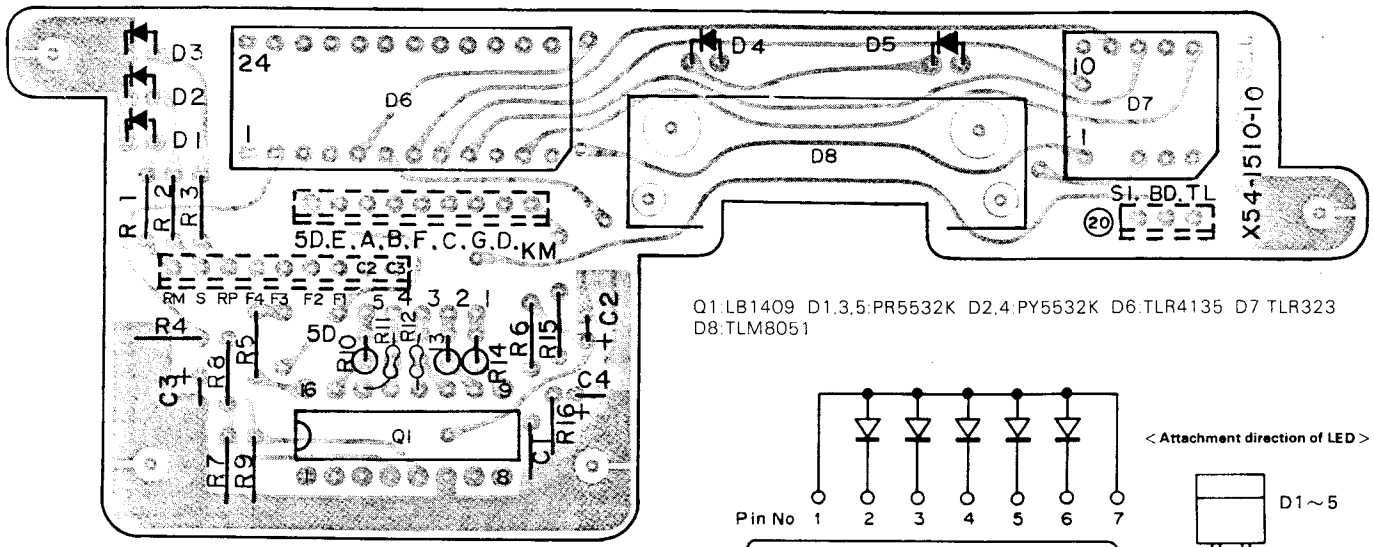

Q1:LB1409 D1,3,5:PR5532K D2,4:PY5532K D6:TLR4135 D7:TLR323 D8:TLM8051

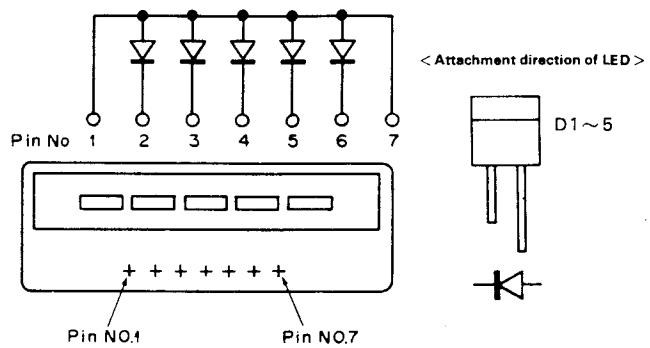

Fig. 14 TLM8051 (Display Unit D8)

Pin No.	Connection	TLR4135	Pin No.	Connection	TLR4135
1	PM	Cathode	13	Dot 1	Cathode
2	Dot 3	Cathode	14	Dot 1	Anode
3	Upper Colon	Cathode	15	Dot 2	Anode
4	Lower Colon	Cathode	16	Unit M Common	Anode
5	E	Cathode*	17	10's M Common	Anode
6	A	Cathode*	18	Upper Colon	Anode
7	B	Cathode	19	Unit H Common	Anode
8	F	Cathode*	20	10's H Common	Anode
9	C	Cathode	21	Lower Colon	Anode
10	G	Cathode*	22	Dot 3	Anode
11	D	Cathode*	23	AM & PM Common	Anode
12	Dot 2	Cathode	24	AM	Cathode

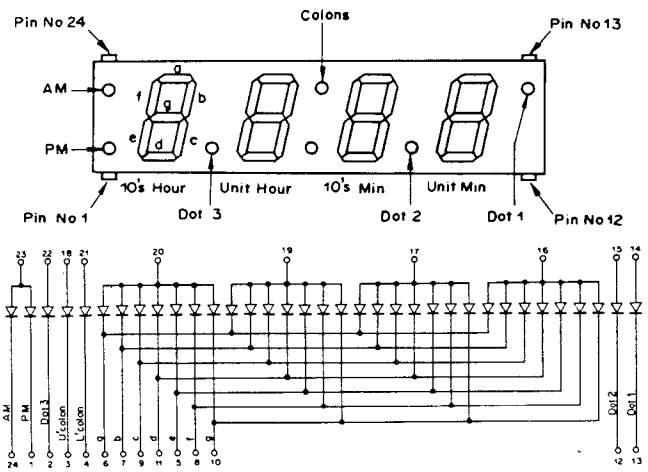

Fig. 13 TLR4135 (Display Unit D6)

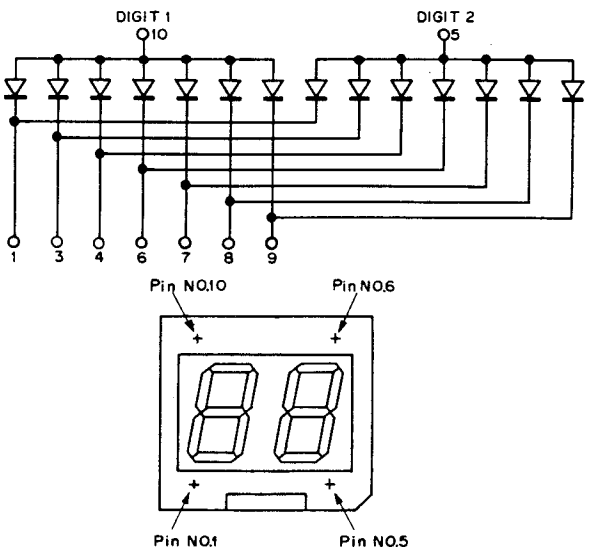

Fig. 15 TLR323 (Display Unit D7)

LB1409 (Display Unit Q1)

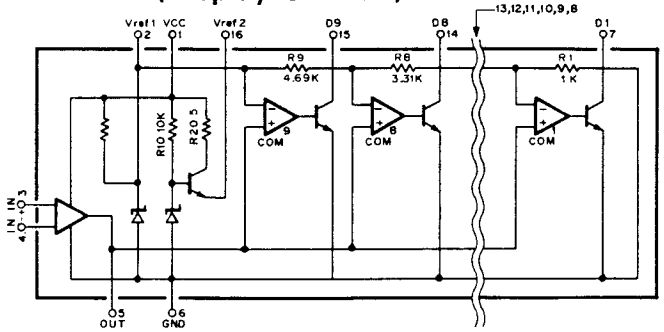

Fig. 16 Equivalent circuit

PC BOARD VIEW

▼ RX UNIT (X55-1270-XX) XX: 10(K), 51(T), 61(W) Parts list: Page 18

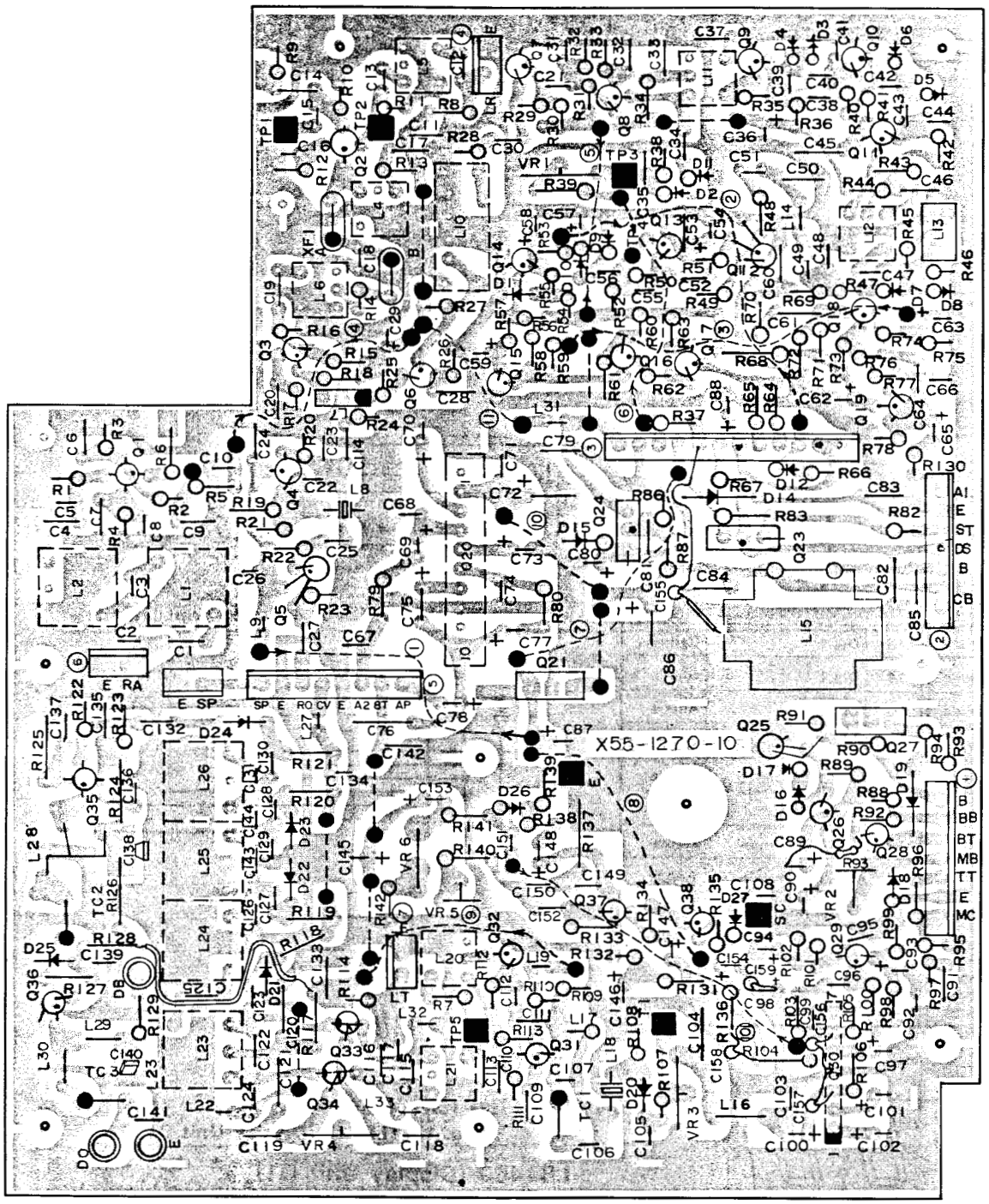

3SK74(L)

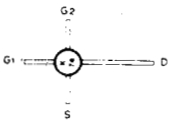

2SC460(B)
2SC458(B)

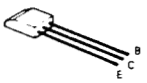

2SA1015(Y)
2SC1775(E)
2SC1815(Y)
2SC2240(GR)

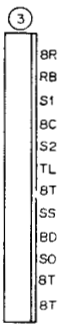

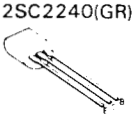

HA1366W

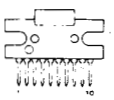

μPC78M08H

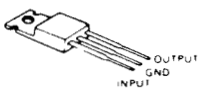

2SA496(Y)
2SC496(Y)

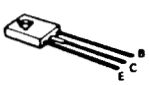

TA7061AP

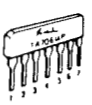

2SK61(GR)

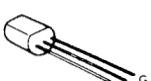

2SC2538

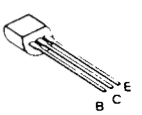

< Attachment method of the C90-0804-05 >

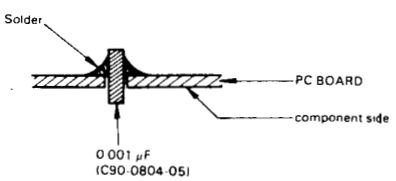

Q1,2,35:3SK74(L) Q3～11,31,32:2SC460(B) Q12,13:2SC1775(E)
Q14～16,18,19,25,26:2SC1815(Y) Q17,28:2SA1015(Y) Q20:HA1366W
Q21,27:μPC78M08H Q23:2SA496(Y) Q24:2SC496(Y) Q29:2SC2240(GR)
Q30:TA7061AP Q33,34:2SK61(GR) Q36:2SC2538-22-A
Q37,38:2SC458(B) (W)(T)
D1,2,7～10:1N60 D3～6,12,14,16,25:1S1555 D11:1S1212 D15:XZ-088
D17:XZ-060 D18:XZ-070 D19:V06B D20,21:1S2208 D22～24:1TT410
D26:1S1555(W)(T) D27:1S1555(T)

PARTS LIST

Note 1:
K: U.S.A T: Britain W: Europe X: Australia

Note 2:
Only special type of resistors (example: cement, metal film, etc.) and capacitors (example: electrolytic, tantalum, mylar, temp. coeff. capacitors) are detailed in the PARTS LIST. For the value of all common type components, refer to the schematic diagram of the P.C. board illustration. Resistors not otherwise detailed are carbon type (1/4W or 1/8W).
Order carbon resistors and capacitors according to the following example.

A carbon resistor's part number is RD14BY 2E222J

A ceramic capacitor's number is CK45F1H103Z, CC45TH1H220J

RESISTOR

1. Type of the carbon resistor

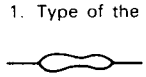
RD14BY
RD14BB (small size)

RD14CY
RD14CB (small size)

2. Wattage

1W → 3A 3W → 3F 5W → 3H
2W → 3D 4W → 3G

3. Resistance value

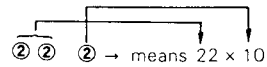

Example 221 → 220Ω 223 → 22 kΩ 225 → 2.2 MΩ
222 → 2.2 kΩ 224 → 220 kΩ

4. Tolerance
J = ±5% (Gold) K = ±10% (Silver)

CAPACITORS

Type I

CC	45	TH	1H	220	J
1'	2	3'	4	5	6

1 = Type ceramic, electrolytic, etc.
2 = Shape round, square, etc.
3 = Temp range
3' = Temp coefficient

Type II

CK	45	F	1H	103	Z
1	2	3	4	5	6

4 = Voltage rating
5 = Value
6 = Tolerance

3' = CC45 ○ ○ ...
Ceramic capacitor (type I) temperature coeff. capacitor 1' 3'

1st word (Color)	C (Black)	L (Red)	P (Orange)	R (Yellow)	S (Green)	T (Blue)	U (Violet)
ppm/°C	0	−80	−150	−220	−330	−470	−750

Ex. **CC45TH** = −470 ±60 ppm/°C

2nd Word	G	H	J	K	L
ppm/°C	±30	±60	±120	±250	±500

3 = CK45 ○
Ceramic capacitor (type II) 3

Cord	B	D	E	F
Operating temperature °C	−30 +85	−30 +85	−30 +85	−10 +70

5 = Capacitor value
Example 010 → 1 pF
100 → 10 pF
101 → 100 pF
102 → 1000 pF = 0.001μF
103 → 0.01 μF

6 = Tolerance

Cord	C	D	G	J	K	M	X	Z	P	No cord
(%)	±0.25	±0.5	±2	±5	±10	±20	+40 −20	+80 −20	+100 −0	More than 10 μF −10 ~ +50 Less than 4.7 μF −10 ~ +75

Less than 10 pF

Cord	B	C	D	F	G
(pF)	±0.1	±0.25	±0.5	±1	±2

Abbreviation		Abbreviation	
Cap.	Capacitor	ML	Mylar
C	Ceramic	S	Styren
E	Electrolytic	T	Tantalum
MC	Mica		

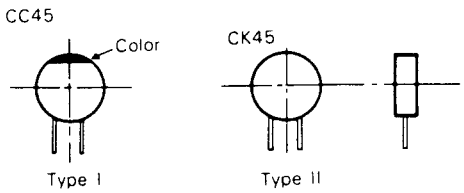

GENERAL

☆: New Parts

Ref. No.	Parts No.	Description	Re-marks
—	A01-0772-03	Case (A) Upper	☆
—	A01-0773-03	Case (B) Lower	☆
—	A13-0612-02	Angle ass'y (right)	
—	A13-0613-02	Angle ass'y (left)	
—	A13-0614-04	Angle (top)	
—	A13-0625-04	Angle ass'y See page 21	☆
—	A20-2379-03	Panel (K)	☆
—	A20-2380-03	Panel (T)	☆
—	A20-2381-03	Panel (W)	☆
—	B03-0516-04	Switch mask × 6	☆
—	B05-0701-04	Speaker grill cloth	
—	B05-0713-04	Grill cloth (Tone oscillator)	
—	B07-0625-04	Side escutcheon × 2	☆

Ref. No.	Parts No.	Description	Re-marks
—	B07-0626-03	Front escutcheon	☆
—	B10-0628-14	Front glass	☆
—	B42-1685-04	Switch plate (H/L)	☆
—	B46-0058-10	Warranty card (K)	
—	B50-2727-00	Operating manual (K)	☆
—	B50-2728-00	Operating manual (T)	☆
—	B50-2729-00	Operating manual (W)	☆
—	E06-0651-05	6P Metal socket (MIC)	
—	E07-0252-05	2P Metal Socket (DC cord ass'y)	
—	E12-0001-05	Earphone plug	
—	E29-0412-05	1P Connector (male)	
—	E29-0413-05	1P Connector (female)	
—	E30-1674-05	DC cord ass'y	

PARTS LIST

Ref. No.	Parts No.	Description	Re-marks
–	E31-0456-05	Plug with lead (SP)	
–	F05-8021-05	Fuse (8A)	
–	G02-0505-05	Knob spring AF	
–	G09-0411-05	Knob spring SQL	☆
–	G13-0628-04	Cushion (battery)	☆
–	G53-0511-04	Packing × 8 (case)	☆
–	H01-2683-03	Carton case (inside) (K) (W)	☆
–	H01-2684-03	Carton case (inside) (T)	☆
–	H10-2501-03	Styrene foam cushion (upper)	
–	H10-2534-02	Styrene foam cushion (lower)	☆
–	H25-0049-03	Accessories bag	
–	H25-0079-04	Protective bag (MIC)	
–	H25-0103-04	Protective bag (cord)	
–	H25-0106-04	Protective bag	
–	J02-0069-05	Foot × 2 (small. Rear)	
–	J02-0070-05	Foot × 2 (large. Front)	
–	J19-1334-05	Battery case	☆
–	J21-0392-04	Lead holder	
–	J21-2504-04	Speaker mounting plate	
–	J31-0514-04	Spacer collar H/L	
–	J32-0745-04	Round boss × 5	☆
–	J32-0746-04	Hex. boss	☆
–	J42-0409-04	Knob bush H/L	
–	J61-0019-05	Viny letie × 2	
–	K21-0751-03	Main knob	☆
–	K23-0734-04	Knob (AF)	☆
–	K23-0735-04	Knob (SQL)	☆
–	K27-0414-04	Push knob × 5	☆
–	K27-0415-04	Push knob (KEY. M. SEL)	☆
–	K29-0734-04	Push knob HI/LOW	☆
–	N09-0008-04	Screw × 4 (angle)	
–	N09-0256-05	Ground screw	
–	N09-0619-05	Plastic screw × 2 (battery)	☆
–	N14-0508-04	Spanner nut	
–	N14-0510-04	Flange nut × 4 (angle)	
–	N14-0516-05	Speed nut × 2	
–	N15-1040-46	Flat washer × 4 (angle)	
–	N15-1060-41	Flat washer × 4 (angle)	
–	N16-0060-41	Spring washer × 4 (angle)	
–	N30-3006-46	Screw × 2	
–	N30-3008-11	Screw × 2	
–	N33-3006-45	Round flat screw (case, etc.)	
–	N99-0304-04	Allen head bolt × 4 (angle)	
–	R19-9404-05	Pot.50kΩ (B), 10kΩ (K)	☆
–	S40-2403-05	Push switch H/L	
–	S40-2415-05	Push switch (K, T) × 5, (W) × 4	☆
–	S40-2416-05	Push switch (K, T) × 1, (W) × 2	☆
–	S59-0406-05	Key board ass'y	☆
–	T03-0027-15	Speaker	
–	T91-0311-05	Microphone (TRIO) (T)	
–	T91-0313-05	Microphone (KENWOOD) (K) (W)	

Ref. No.	Parts No.	Description	Re-marks
D101,102	V30-1170-06	LED AA5532T	☆
–	W01-0401-04	Allen key	
–	W02-0315-05	Rotary encoder	☆
–	X45-1150-10	Final unit	☆
–	X50-1650-10	PLL unit	☆
–	X53-1180-10	Control unit (K)	☆
–	X53-1180-61	Control unit (W) (T)	☆
–	X54-1500-10	Encoder unit	☆
–	X54-1510-10	Display unit	☆
–	X55-1270-10	RX unit (K)	☆
–	X55-1270-51	PX unit (T)	☆
–	X55-1270-61	RX unit (W)	☆

FINAL UNIT (X45-1150-10)

Ref. No.	Parts No.	Description			Re-marks
C2	CE04W1C221Q	E	220μF	16V	
C4	CE04W1C101Q	E	100μF	16V	
C5	CC45SL2H070D	C	7pF	±0.5pF	
C6	CC45SL2H120J	C	12pF	±5%	
C7	CC45SL2H101J	C	100pF	±5%	
C10	CC45CH1H330J	C	33pF	±5%	
C11	CC45SL2H101J	C	100pF	±5%	
C12	CC45SL2H330J	C	33pF	±5%	
C13	CC45CH1H0R5C	C	0.5pF	±0.25pF	
C15	CC45SL2H390J	C	39pF	±5%	
C16	CC45SL2H100D	C	10pF	±0.5pF	
C17	CC45SL2H020C	C	2pF	±0.25pF	
C19	CC45SL2H220J	C	22pF	±5%	
C23	CS15E1VR47M	T	0.47μF	35V	
C25	CS15E1C4R7M	T	4.7μF	16V	
C28	CC45SL2H120J	C	12pF	±5%	
–	E04-0102-05	UHF type receptacle			
–	E06-0252-05	2P Metal socket			
–	E08-0304-05	Power jack (BACK UP)			
–	E11-0403-05	Earphone jack			
–	E23-0046-04	Square terminal × 7			
–	E23-0401-05	Round terminal × 3			
–	E40-0473-05	Mini connect wafer 4P			
–	E40-0573-05	Mini connect wafer 5p			
–	F01-0747-05	Heat sink			☆
–	F11-0781-04	Shield cover FINAL			☆
–	F20-0078-05	MICA insulator (Q5)			
–	F29-0014-05	Shoulder washer (Q5)			
L1	L34-0823-05	VHF coil	5φ3T		
L2	L34-0438-05	Coil	0.9μH		
L3	L34-0692-05	VHF coil	5φ4T		
L4	L34-0817-05	VHF coil	5φ3T		
L5	L34-0823-05	VHF coil	5φ3T		
L6	L40-1511-03	Ferri-inductor	150μH		
L7.8	L33-0025-05	Choke coil	1μH		
L9	L34-0887-05	VHF coil	5φ3T		
VR1	R12-5024-05	Trim. pot	100kΩ (2 poles)		

PARTS LIST

Ref. No.	Parts No.	Description		Remarks
VR2	R12-0048-05	Trim. pot	100Ω	
VR3	R12-4016-05	Trim. pot	50kΩ	
VR4	R12-0042-05	Trim. pot	500Ω	
—	R92-0150-05	Short jumper		
RL1	S51-1404-05	Relay		
Q1～3	V03-1815-06	TR	2SC1815 (Y)	
Q4	V01-0113-05	TR	2SA496 (Y)	
Q5	V04-0880-16	TR	2SD880 (Y)	
Q6	V30-1171-06	Power module	M57733	☆
D1	V11-5260-16	Diode	MI402	
D2	V11-5273-66	Diode	MI303	
D3,4	V11-0051-05	Diode	IN60	
D5	V11-4104-20	Zener diode	XZ-064	
D6	V11-6460-26	Diode	U15B	☆
D7	V11-0076-05	Diode	1S1555	

PLL UNIT (X50-1650-10)

Ref. No.	Parts No.	Description			Remarks
C1	CC45PG1H080D	C	8pF	±0.5pF	
C2	CC45CH1H060D	C	6pF	±0.5pF	
C3	CC45CH1H0R5C	C	0.5pF	±0.25pF	
C4	CC45CH1H060D	C	6pF	±0.5pF	
C5	CC45CH1H150J	C	15pF	±5%	
C6	CC45CH1H030C	C	3pF	±0.25pF	
C7	CE04W1A101Q	E	100μF	10V	
C9	CC45CH1H040C	C	4pF	±0.25pF	
C11	CC45CH1H020C	C	2pF	±0.25pF	
C12	CC45CH1H220J	C	22pF	±5%	
C15	CE04W1C100Q	E	10μF	16V	
C18	CC45CH1H030C	C	3pF	±0.25pF	
C19	CC45CH1H0R5C	C	0.5pF	±0.25pF	
C21	CC45CH1H220J	C	22pF	±5%	
C23	CE04W1A470Q	E	47μF	10V	
C24,25	CC45CH1H101J	C	100pF	±5%	
C27	CC45UJ1H180J	C	18pF	±5%	
C28	CC45UJ1H100D	C	10pF	±0.5pF	
C29	CC45UJ1H390J	C	39pF	±5%	
C31	CS15E1VR47M	T	0.47μF	35V	
C34	CE04W1A101Q	E	100μF	10V	
C35	C91-0131-05	C	0.01μF	±10%	☆
C36	CQ92M1H473K	ML	0.047μF	±10%	
C38	CS15E1C4R7M	T	4.7μF	16V	
C39	CS15E1C2R2M	T	2.2μF	16V	
C40	CQ92M1H223K	ML	0.022μF	±10%	
C41	CE04W1E4R7Q	E	4.7μF	25V	
C43	CE04W1H010Q	E	1μF	50V	
C44	CE04W1A101Q	E	100μF	10V	
C48	CC45CH1H030C	C	3pF	±0.25pF	
C49	CC45SL1H101J	C	100pF	±5%	
C50	CE04W1A470Q	E	47μF	10V	
C52	CQ92M1H223K	ML	0.022μF	±10%	
C53	CC45SL1H101J	C	100pF	±5%	
C54,55	CC45CH1H100D	C	10pF	±0.5pF	
C56	CE04W1A101Q	E	100μF	10V	

Ref. No.	Parts No.	Description		Remarks
C63	C91-0457-05	C 0.022μF ±10%		
C65	CC45UJ1H070D	C 7pF ±0.5pF		
TC1	C05-0062-05	Ceramic timmer	6pF	
TC2	C05-0031-15	Ceramic timmer	10pF	
—	E23-0046-04	Square terminal × 3		
—	E40-0273-05	Mini connect wafer 2P		
—	E40-0473-05	Mini connect wafer 4P		
—	E40-0673-05	Mini connect wafer 6P		
—	E40-0773-05	Mini connect wafer 7P		
L1	L40-3391-03	Ferri-inductor	3.3μH	
L2	L32-0624-05	Oscillating coil	VCO	
L3	L40-3391-03	Ferri-inductor	3.3μH	
L4	L34-0820-05	Tuning coil		
L5,6	L34-0901-05	Tuning coil		
L7	L33-0631-05	Choke coil	4.7μH ±5%	
L8,9	L40-1021-03	Ferri-inductor	1mH	
L10	L40-4711-03	Ferri-inductor	470μH	
L11	L34-0683-05	Tuning coil		
L12,13	L40-1021-03	Ferri-inductor	1mH	
L14	L40-1501-03	Ferri-inductor	15μH	
L15	L77-0855-05	Crystal	14.2005 MHz	
L16	L40-4711-03	Ferri-inductor	470μH	
VR1	R12-4020-05	Trim. pot	50kΩ	
—	R92-0150-05	Short jumper × 3		
Q1	V09-1001-16	FET	2SK19 (GR) TRIO-5	
Q2	V03-1923-06	TR	2SC1923 (O)	
Q3	V09-1002-56	FET	3SK74 (L)	
Q4	V03-0079-05	TR	2SC460 (B)	
Q5	V09-0060-05	FET	2SK30A (GR)	
Q6,7	V03-2240-06	TR	2SC2240 (GR)	
Q8	V03-1775-06	TR	2SC1775 (E)	
Q9	V09-1002-56	FET	3SK74 (L)	
Q10～12	V03-0079-05	TR	2SC460 (B)	
Q13	V03-1923-06	TR	2SC1923 (O)	
Q14	V30-1132-06	IC	TC5081P	
Q15	V30-1133-06	IC	TC5082P-GL	
Q16	V30-1036-16	IC	TC9122P	
D1	V11-1260-36	Vari-cap diode	1SV50S	
D2,3	V11-0414-05	Diode	1S2588	
D4	V11-0374-05	Diode	1SS16	
D5	V11-0317-05	Vari-cap diode	1S2208	

CONTROL UNIT (X53-1180-XX)
XX: 10(K), 61(W)(T)

Ref. No.	Parts No.	Description			Remarks
C1	CE04W1C331Q	E	330μF	16V	
C2	CE04W1A101Q	E	100μF	10V	
C4	CE04W1C470Q	E	47μF	16V	
C5	CE04W1A470Q	E	47μF	10V	
C6,7	CE04W1A471Q	E	470μF	10V	
C10	CE04W1H010Q	E	1μF	50V	
C11	CE04W1A101Q	E	100μF	10V	
C12,13	CQ92M1H223K	ML	0.022μF	±10%	
C18	CQ92M1H393K	ML	0.039μF	±10%	

PARTS LIST

Ref. No.	Parts No.	Description	Remarks
—	E02-0103-05	IC Socket 16P (K)	
—	E02-0106-05	IC Socket 42P	
—	E40-0311-05	Mini connect wafer 3P	
—	E40-0373-05	Mini connect wafer 3P	
—	E40-0573-05	Mini connect wafer 5P	
—	E40-0773-05	Mini connect wafer 7P	
—	E40-1073-05	Mini connect wafer 10P	
—	E40-1273-05	Mini connect wafer 12P	
—	G11-0605-04	Cushion (Transducer)	
—	G13-0629-14	Cushion (A) (Transducer) (K) × 1 (W) × 1	☆
—	G13-0630-14	Cushion (B) (Transducer) (W)	☆
	G13-0634-04	Cushion (C) (Transducer) (K)	☆
L1	L30-0503-05	IFT	
L2	L78-0003-05	Ceramic oscillator 3.58MHz (K)	
R1	RS14AB3A330J	Metal film 33Ω±5%1W	
R36	R90-0526-05	Resistor block 27kΩ × 4	
R37	R90-0530-05	Resistor block 2.7kΩ × 4	☆
R47	R90-0529-05	Resistor block 100kΩ × 4	☆
R48	R90-0526-05	Resistor block 27kΩ × 4 (K)	
VR1	R12-2015-05	Trim.pot 5kΩ (K)	
BZ1	T95-0051-05	Transducer	
Q1～13	V03-2603-06	TR 2SC2603 (E)	
Q14	V30-1067-06	IC NJM78L06K	
Q15	V30-1223-16	IC μPC78M05H	☆
Q16	V30-1030-56	IC SN74LS247N	
Q17	V30-1166-06	IC MC14599B	
Q18	V30-1164-06	IC μPD650C-037	
Q19,20	V30-1066-06	IC TC4001BP	
Q21～23	V03-2603-06	TR 2SC2603 (E)	
Q24～27	V01-1115-16	TR 2SA1115 (E) (K)	
Q28	V30-1074-06	IC MK5087N (K)	
D1	V11-4101-20	Zener diode XZ-060	
D2～11	V11-0076-05	Diode 1S1555	
D12	V11-0051-05	Diode 1N60	
D13～17	V11-0076-05	Diode 1S1555	
D18		not used	
D19～24	V11-0076-05	Diode 1S1555	
D25,26	V11-0051-05	Diode 1N60	
D27～32	V11-0076-05	Diode 1S1555 (K)	
D33～36	V11-0076-05	Diode 1S1555 (W, T)	

ENCODER UNIT (X54-1500-10)

Ref. No.	Parts No.	Description	Remarks
C1～4	CC45SL1H101J	C 100pF ±5%	
—	E40-0373-05	Mini connect wafer 3P	
—	E40-0573-05	Mini connect wafer 5P	

Ref. No.	Parts No.	Description	Remarks
Q1	V30-1066-06	IC TC4001BP	
Q2	V30-0301-70	IC TC4011BP	
Q3	V30-1009-26	IC TC4049BP	

DISPLAY UNIT (X54-1510-10)

Ref. No.	Parts No.	Description	Remarks
C2	CS15E1C010M	T 1μF 16V	
C3	CS15E1C4R7M	T 4.7μF 16V	
C4	CS15E1V0R1M	T 0.1μF 35V	
—	E40-0373-05	Mini connect wafer 3P	
—	E40-0973-05	Mini connect wafer 9P	
—	N09-0625-04	Screw M2.5 × 6	☆
—	N14-0520-04	Nut M2.5	☆
D1	V11-7272-36	LED PR5532K	
D2	V11-7272-46	LED PY5532K	
D3	V11-7272-36	LED PR5532K	
D4	V11-7272-46	LED PY5532K	
D5	V11-7272-36	LED PR5532K	
D6	V11-3173-06	LED TLR4135	☆
D7	V11-3172-96	LED TLR323	☆
D8	V11-3173-16	LED block TLM8051	☆
Q1	V30-1163-06	IC LB1409	☆

RX UNIT (X55-1270-XX) XX: 10(K), 51(T), 61(W)

Ref. No.	Parts No.	Description	Remarks
C1	CC45RH1H120J	C 12pF ±5%	
C2	CC45CH1H330J	C 33pF ±5%	
C3	CC45CH1H030C	C 3pF ±0.25pF	
C4	CC45CH1H220J	C 22pF ±5%	
C5	CC45RH1H100D	C 10pF ±0.5pF	
C12	CC45CH1H330J	C 33pF ±5%	
C13	CC45CH1H020C	C 2pF ±0.25pF	
C14	CC45CH1H150J	C 15pF ±5%	
C15	CC45CH1H0R5C	C 0.5pF ±0.25pF	
C18	CC45CH1H050C	C 5pF ±0.25pF	
C19	CC45CH1H680J	C 68pF ±5%	
C20	CQ92M1H223K	ML 0.022μF ±10%	
C21	CQ92M1H103K	ML 0.01μF ±10%	
C23	CC45SL1H151J	C 150pF ±5%	
C25	CC45CH1H220J	C 22pF ±5%	
C26	CE04W1A470Q	E 47μF 10V	
C28	CQ92M1H223K	ML 0.022μF ±10%	
C29	CE04W1A470Q	E 47μF 10V	
C32,33	CQ92M1H223K	ML 0.022μF ±10%	
C36	CE04W1A101Q	E 100μF 10V	
C37	CQ92M1H223K	ML 0.022μF ±10%	
C38	CC45SL1H470J	C 47pF ±5%	
C41	CQ92M1H222K	ML 0.0022μF ±10%	
C44	CQ92M1H222K	ML 0.0022μF ±10%	
C45	CQ92M1H473K	ML 0.047μF ±10%	
C46	CQ92M1H223K	ML 0.022μF ±10%	

PARTS LIST

Ref. No.	Parts No.	Description			Remarks
C47	CQ92M1H102K	ML	0.001μF	±10%	
C48	CQ92M1H332K	ML	0.0033μF	±10%	
C49	CQ92M1H222K	ML	0.0022μF	±10%	
C50	CQ92M1H393K	ML	0.039μF	±10%	
C51	CQ92M1H222K	ML	0.0022μF	±10%	
C52	CQ92M1H103K	ML	0.01μF	±10%	
C53	CQ92M1H393K	ML	0.039μF	±10%	
C54	CS15E1V0R1M	T	0.1μF	35V	
C55	CC45SL1H220J	C	22pF	±5%	
C56	CQ92M1H222K	ML	0.0022μF	±10%	
C57,58	CS15E1A3R3M	T	3.3μF	10V	
C59	CS15E1C4R7M	T	4.7μF	16V	
C60	CQ92M1H223K	ML	0.022μF	±10%	
C61	CQ92M1H473K	ML	0.047μF	±10%	
C62	CE04W1C220Q	E	22μF	16V	
C63	CE04W1C100Q	E	10μF	16V	
C64	CQ92M1H103K	ML	0.01μF	±10%	
C65	CS15E1V0R1M	T	0.1μF	35V	
C66	CQ92M1H332K	ML	0.0033μF	±10%	
C67	CC45SL1H101J	C	100pF	±5%	
C68	CQ92M1H332K	ML	0.0033μF	±10%	
C69	CE04W1H010Q	E	1μF	50V	
C70	CE04W1A101Q	E	100μF	10V	
C72	C90-0820-05	E	470μF	16V (small)	
C73	CE04W1A470Q	E	47μF	10V	
C74	CC45SL1H101J	C	100pF	±5%	
C75	CE04W1A101Q	E	100μF	10V	
C76	CQ92M1H104K	ML	0.1μF	±10%	
C77	CE04W1H010Q	E	1μF	50V	
C78	CE04W1A101Q	E	100μF	10V	
C80	CE04W1C220Q	E	22μF	16V	
C86	C90-0820-05	E	470μF	16V (small)	
C87,88	CE04W1A470Q	E	47μF	10V	
C89	CE04W1C470Q	E	47μF	16V	
C90	CE04W1A470Q	E	47μF	10V	
C93	CS15E1C010M	T	1μF	16V	
C94	CE04W1E4R7Q	E	4.7μF	25V	
C95	CQ92M1H682K	ML	0.0068μF	±10%	
C96	CQ92M1H222K	ML	0.0022μF	±10%	
C97	CE04W1C220Q	E	22μF	16V	
C98	CE04W1A470Q	E	47μF	10V	
C100	CE04W1H010Q	E	1μF	50V	
C101	CE04W1E4R7Q	E	4.7μF	25V	
C102	CE04W1A470Q	E	47μF	10V	
C103	CQ92M1H103K	ML	0.01μF	±10%	
C104	CQ92M1H393K	ML	0.039μF	±10%	
C106	CC45TH1H100D	C	10pF	±0.5pF	
C107	CC45UJ1H010C	C	1pF	±0.25pF	
C110,111	CC45SL1H221J	C	220pF	±5%	
C112	CC45CH1H100D	C	10pF	±0.5pF	
C114	CC45CH1H180J	C	18pF	±5%	
C115	CC45CH1H330J	C	33pF	±5%	
C116,117	CC45CH1H220J	C	22pF	±5%	
C122	CC45TH1H020C	C	2pF	±0.25pF	
C123,124	CC45TH1H100D	C	10pF	±0.5pF	
C125	CC45CH2H070D	C	7pF	±0.5pF	
C126	CC45TH1H030C	C	3pF	±0.25pF	
C127,128	CC45TH1H060D	C	6pF	±0.5pF	
C129	CC45TH1H050C	C	5pF	±0.25pF	
C130	CC45TH1H060D	C	6pF	±0.5pF	
C131	CC45TH1H050C	C	5pF	±0.25pF	
C132	CC45CH1H220J	C	22pF	±5%	
C138	C90-0804-05	C	0.001μF		
C140	C90-0804-05	C	0.001μF		
C141	CC45CH1H150J	C	15pF	±5%	
C143,144	CC45CH1H0R5C	C	0.5pF	±0.25pF	

Ref. No.	Parts No.	Description			Remarks
C145	CE04W1A470Q	E	47μF	10V	
C146,147	CE04W1C220Q	E	22μF	16V (W) (T)	
C148	CE04W1H010Q	E	1μF	50V (W) (T)	
C149,150	C91-0433-05	Laminated cap.		0.0039μF (W) (T)	
C151	CQ92M1H472K	ML	0.0047μF	±10% (W) (T)	
C152	C91-0433-05	Laminated cap.		0.0039μF (W) (T)	
C153,154	CS15E1A150K	T	15μF	10V (T)	
TC1	C05-0062-05	Ceramic Trimmer 6PF			
TC2	C05-0031-15	Ceramic Trimmer 10PF			
TC3	C05-0030-15	Ceramic Trimmer 20PF			
—	E23-0046-04	Square terminal × 7			
—	E23-0401-05	Round terminal × 3			
—	E40-0273-05	Mini connect wafer 2P			
—	E40-0773-05	Mini connect wafer 7P			
—	E40-0873-05	Mini connect wafer 8P			
—	E40-1273-05	Mini connect wafer 12P			
—	J31-0502-04	PC Board collar × 6			
—	J42-0404-05	PC Board bush × 6			
L1,2	L31-0267-05	Tuning coil			
L3	L79-0452-05	Helical block		2 MHz (W)(T)	
L3	L79-0461-05	Helical block		5 MHz (K)	☆
L4	L30-0289-05	IFT			
L5	L34-0683-05	Tuning coil			
L6	L30-0289-05	IFT			
L7	L72-0014-05	Ceramic filter		SFE 10.7 MA5	
L8	L77-0858-05	Crystal		10.240 MHz	
L9	L40-1511-03	Ferri-inductor		150μH	
L10	L72-0315-05	Ceramic filter		CFW455F	
L11	L30-0504-05	IFT			
L12	L30-0503-05	IFT			
L13	L79-0446-05	Ceramic discri		CFY455S	
L14	L40-6825-04	Ferri-inductor		6.8 mH	
L15	L15-0016-05	Choke trans.			
L16	L40-1541-27	Ferri-inductor		150mH	
L17	L33-0615-05	Choke coil			
L18	L77-0859-05	Crystal		10.695 MHz	
L19	L40-1021-03	Ferri-inductor		1 mH	
L20	L30-0005-05	IFT			
L21	L31-0313-05	Tuning coil			
L22	L40-1001-03	Ferri-inductor		10μH	
L23	L34-0886-05	Tuning coil			
L24	L31-0180-05	Tuning coil			
L25	L31-0266-05	Tuning coil			
L26	L31-0267-05	Tuning coil			
L27	L40-1511-03	Ferri-indudor		150μH	
L28	L34-0902-05	VHF coil		5φ5T	☆
L29	L34-0452-05	VHFcoil		3φ6T	
L30	L34-0691-05	VHF coil		5φ5T	
L31	L40-1021-03	Ferri-inductor		1 mH	
L32,33	L40-1011-03	Ferri-inductor		100μH	
XF,(A,B)	L71-0216-05	MCF		10.695 MHz	
VR1	R12-3025-05	Trim. pot		10kΩ	
VR2	R12-1403-05	Trim. pot		1kΩ	
VR3	R12-2015-05	Trim. pot		5kΩ	

PARTS LIST/KEY BOARD ASSEMBLY

Ref. No.	Parts No.	Description		Re-marks
VR4	R12-0042-05	Trim. pot	500Ω	
VR5	R12-2405-05	Trim. pot	5kΩ (W) (T)	
VR6	R12-4020-05	Trim. pot	50kΩ (2 pole) (T)	
–	R92-0150-05	Short jumper		
R94	RC05GF2H560J	Solid	56Ω ±5% 1/2W	
R132	R92-0616-05	Metal film	10kΩ (W) (T)	
R133	RN14BK2E4703F	Metal film	470kΩ ±1%1/4W	
R137	R92-0616-05	Metal film	10kΩ (W) (T)	
R140	R92-0617-05	Metal film	7.5kΩ (W) (T)	
Q1,2	V09-1002-56	FET	3SK74 (L)	
Q3～11	V03-0079-05	TR	2SC460 (B)	
Q12,13	V03-1775-06	TR	2SC1775 (E)	
Q14～16	V03-1815-06	TR	2SC1815 (Y)	
Q17	V01-1015-06	TR	2SA1015 (Y)	
Q18,19	V03-1815-06	TR	2SC1815 (Y)	
Q20	V30-1045-06	IC	HA1366W	
Q21	V30-1223-16	IC	μPC78M08H	
Q22		Not used		
Q23	V01-0113-05	TR	2SA496 (Y)	
Q24	V03-0336-05	TR	2SC496 (Y)	
Q25,26	V03-1815-06	TR	2SC1815 (Y)	
Q27	V30-1223-16	IC	μPC78M08H	
Q28	V01-1015-06	TR	2SA1015 (Y)	
Q29	V03-2240-06	TR	2SC2240 (GR)	
Q30	V30-0039-05	IC	TA7061AP	
Q31,32	V03-0079-05	TR	2SC460 (B)	
Q33,34	V09-1014-06	FET	2SK61 (GR)	
Q35	V09-1002-56	FET	3SK74 (L)	
Q36	V03-2538-16	TR	2SC2538-22-A	
Q37,38	V03-0093-05	TR	2SC458(B) (W)(T)	
D1,2	V11-0051-05	Diode	1N60	
D3～6	V11-0076-05	Diode	1S1555	
D7～10	V11-0051-05	Diode	1N60	
D11	V11-1262-06	Varistor	1S1212	
D12	V11-0076-05	Diode	1S1555	
D13		not used		
D14	V11-0076-05	Diode	1S1555	
D15	V11-4163-56	Zener diode	XZ-088	
D16	V11-0076-05	Diode	1S1555	
D17	V11-4101-20	Zener diode	XZ-060	
D18	V11-4162-66	Zener diode	XZ-070	
D19	V11-0219-05	Diode	V06B	
D20,21	V11-0317-05	Vari-cap diode	1S2208	
D22～24	V11-7761-86	Vari-cap diode	ITT410	
D25	V11-0076-05	Diode	1S1555	
D26	V11-0076-05	Diode	1S1555 (W) (T)	
D27	V11-0076-05	Diode	1S1555 (T)	

Key board ass'y (S59-0406-05)

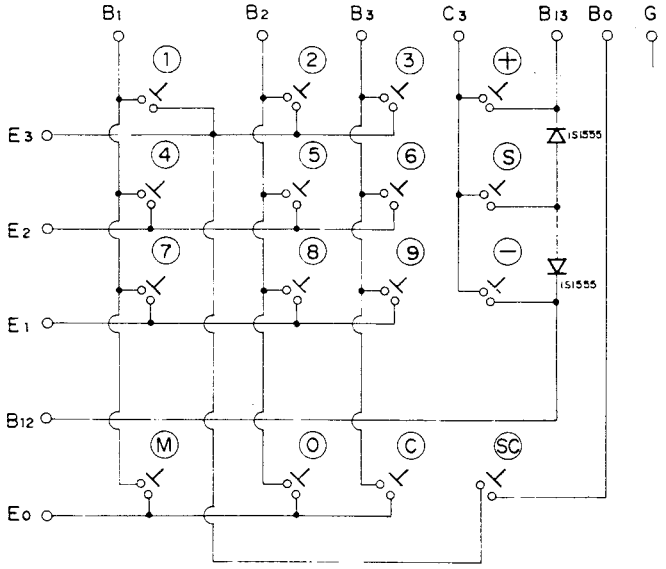

PACKING/DISASSEMBLY

Angle ass'y (A13-0625-04)

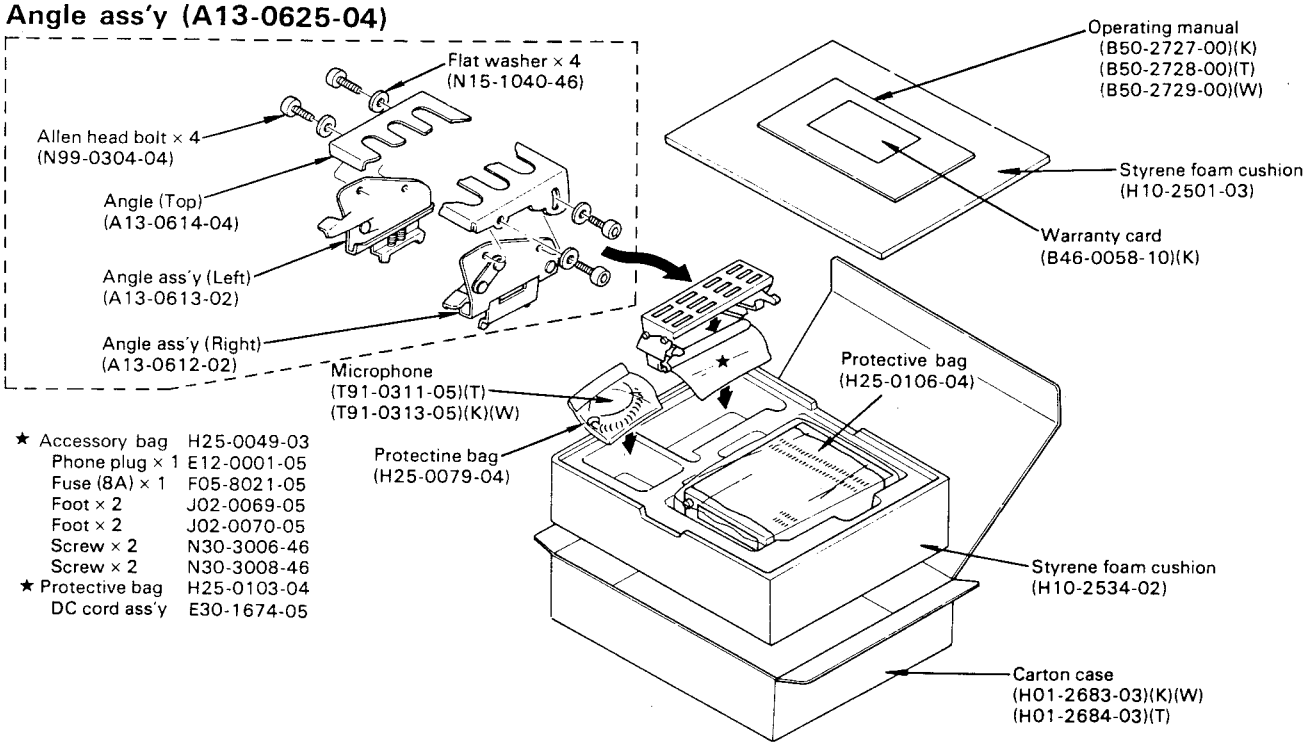

★ Accessory bag H25-0049-03
Phone plug × 1 E12-0001-05
Fuse (8A) × 1 F05-8021-05
Foot × 2 J02-0069-05
Foot × 2 J02-0070-05
Screw × 2 N30-3006-46
Screw × 2 N30-3008-46
★ Protective bag H25-0103-04
DC cord ass'y E30-1674-05

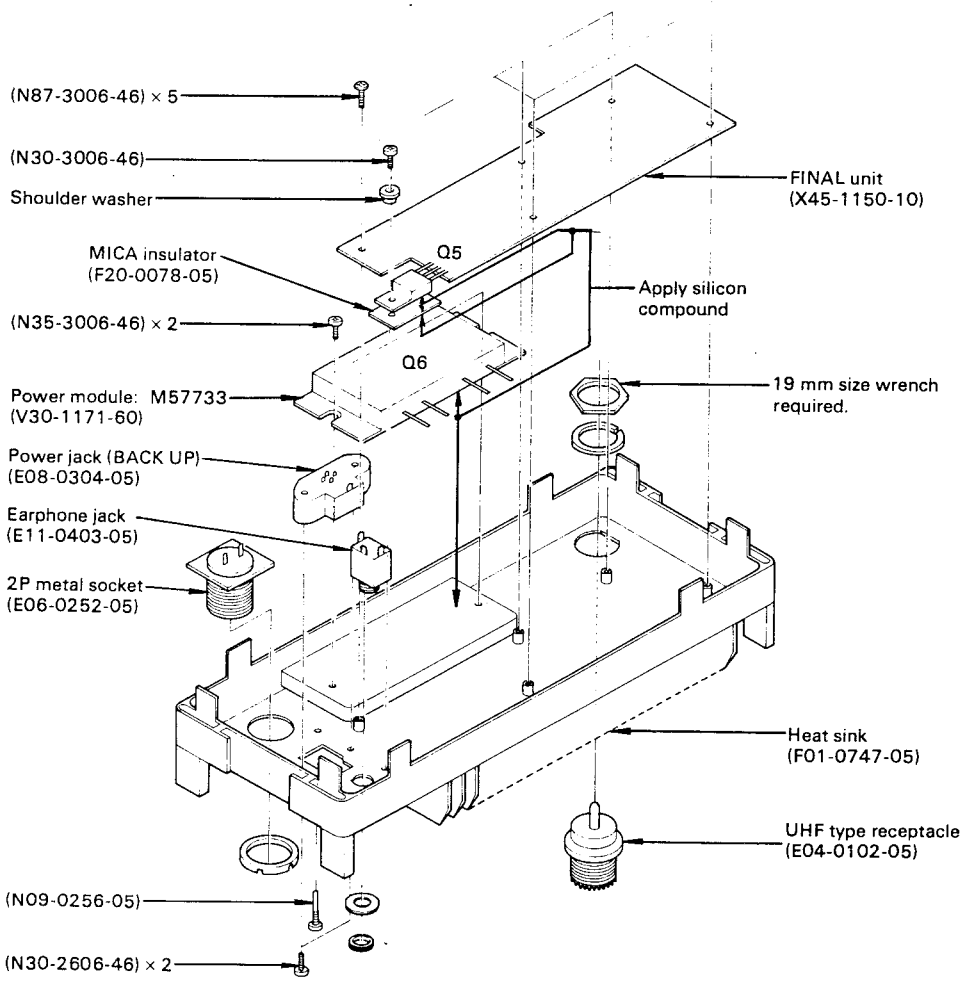

Heat sink ass'y/disassembly

DISASSEMBLY

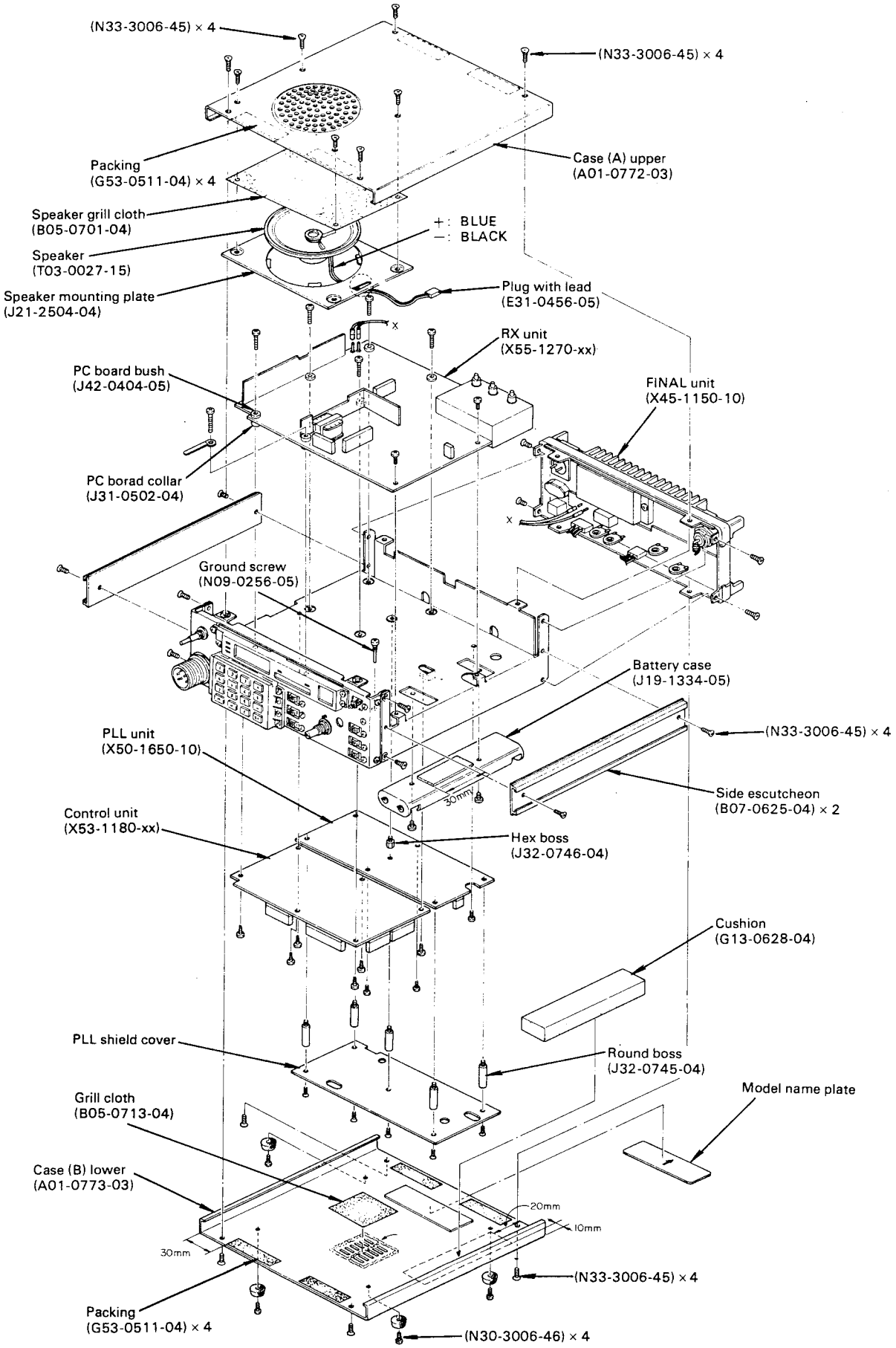

DISASSEMBLY

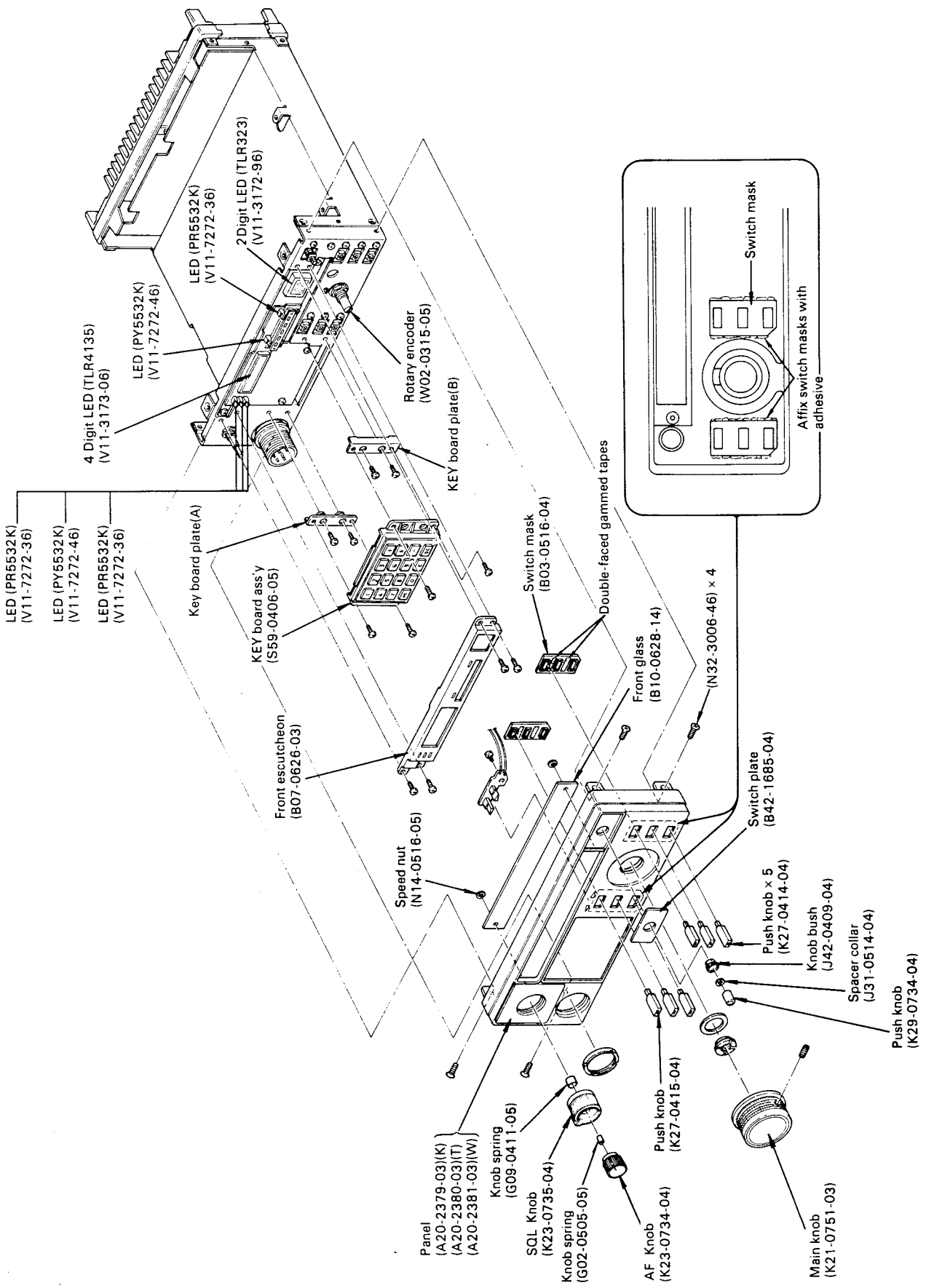

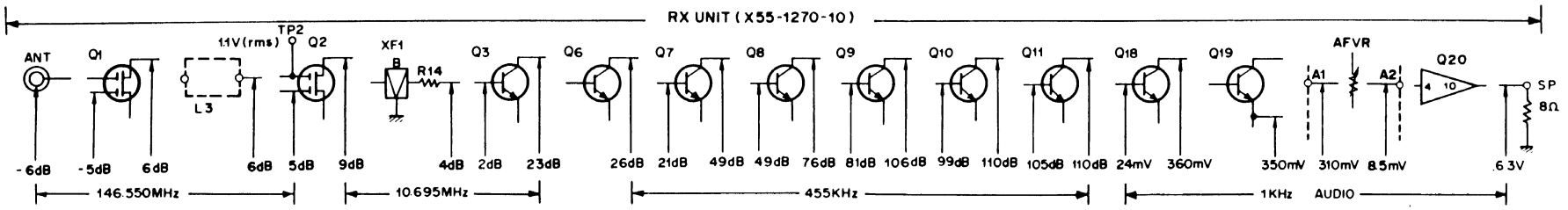

This scan is not authorized to be sold on eBay. If you bought this scanned manual on eBay, then the vendor you bought it from is a Thief who sold you stolen property. Please file a complaint with EBay security and demand a refund.

Note:

1 In measuring the circuit from the ANT terminal to the collector of Q11, an unmodulated signal of 146 550 MHz, −6 dBμ from an SSG was applied to the ANT terminal to obtain a reference NQ sensitivity. Then, the SSG output was measured when the NQ sensitivity at each SSG signal input point became equal to the reference NQ sensitivity.
The SSG output was measured through a 0.01 μF capacitor.

2 In measuring the circuit from the base of Q18 to the SP terminal, an SSG signal of 146 550 MHz, −6 dBμ, 1 kHz MOD, 5 kHz DEV was applied to the ANT terminal, and the AF VR was adjusted to obtain an AF output of 0.63V/8Ω. The signal voltage at each point was measured with an audio V.V.

<Transmitter Section>

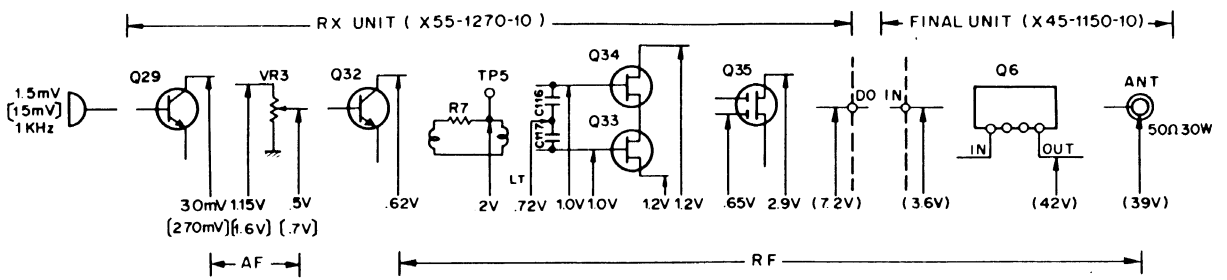

Note:

1 The signal level before DO was measured with the coaxial cable disconnected from DO and the final unit. The signal level after the IN terminal was the level under normal operating conditions.

2 The AF unit was measured using an audio V.V., and the RF unit was measured using an RF V.V. (1/100 attenuator used for levels of more than 3V)

3 The RF voltages shown in round parentheses ( ) are reference values since they are subject to change according to the positions of the probes.

4 The AF voltages shown in square parentheses [ ] are values with an input of 15 mV.

<REFERENCE>

Japanese "SG"	American "SG"
−6 dB	0.25 μV
0 dB	0.5 μV
6 dB	1 μV
12 dB	2 μV
24 dB	8 μV
30 dB	15.8 μV
40 dB	50 μV
50 dB	158 μV
60 dB	500 μV
70 dB	1.58 mV
80 dB	5 mV
90 dB	15.8 mV
100 dB	50 mV
120 dB	0.5V

ADJUSTMENTS

<Test Equipment>

1. Tester
   - Input: Sufficient
2. RF VTVM (RF V.M.)
   - Input impedance: 1 MΩ and less than 2 pF
   - Voltage range: F.S. = 10 mV to 300V
   - Frequency range: 150 MHz or greater
3. Frequency counter (F count)
   - Minimum input voltage: 50 mV
   - Frequency range: 150 MHz or greater
4. DC power supply
   - Voltage 10V to 17V variable
   - Current: 8A min.
5. RF Power Meter
   - Dissipation: 50W
   - Impedance: 50Ω
   - Frequency range: 144 MHz
6. AF VTVM (AF V.M.)
   - Input impedance: 1 MΩ or greater
   - Voltage range: F.S = 1 mV to 30V
   - Frequency range: 50 Hz to 10 kHz
7. AF Generator (AG)
   - Frequency range: 100 Hz to 10 kHz
   - Output: 0.5 mV to 1V
8. Linear detector
   - Frequency range: 144 MHz
9. Directional coupler
10. Oscilloscope
    - With horizontal input and high sensitivity
11. Standard signal generator (SSG)
    - Frequency range: 144 ~ 149 MHz
    - Modulation: amplitude and frequency modulation
    - Output: −20 dB ~ 100 dB
12. AF Dummy load
    - 8Ω, 5W (approx.)
13. Sweep generator
    - Frequency range: 144 ~ 149 MHz

<Preparation>

Unless otherwise specified, set the controls as follows.

POWER/VOL SW	ON
SEND/REC (MIC)	REC
AF VOL	MIN
SQUELCH VOL	MIN
KEY M. SEL SW	KEY
STEP SW	10 kHz
HI/LOW SW	HI
PRIORITY	
{ ALERT	OFF
{ OPER	OFF
TONE	OFF

Notes:

- When adjusting the trimmers or coils, use a non-induced adjusting rod of bakelite, etc.
- When adjusting the RX section never transmit to prevent SSG damage.
- Connect MIC connector as shown in Fig. 18.

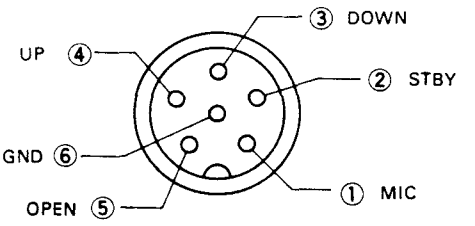

Fig. 17 MIC terminals (view from front panel side)

- The output level of SSG is indicated as SSG's open circut.

ADJUSTMENTS

RX UNIT (X55-1270-10) ADJUSTMENT

[TX]

1. 10.695 MHz
   1) Unplug the LT connector. Place the unit in transmit mode.
   2) Connect RF VTVM to TP5 and adjust L20 and L21 for the maximum signal (0.21V rms nominal)
   3) Connect frequency counter to TP5 and adjust TC1 for 10.6950 MHz.
2. VCT circuit
   1) Connect the LT connector. Adjust the dial frequency to 147.000 (K type), 145.000 (W, T type). Set VR4 to the center position and TC2 to the minimum position. Unplug the DO terminal.

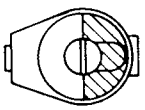

TC2 Minimum position

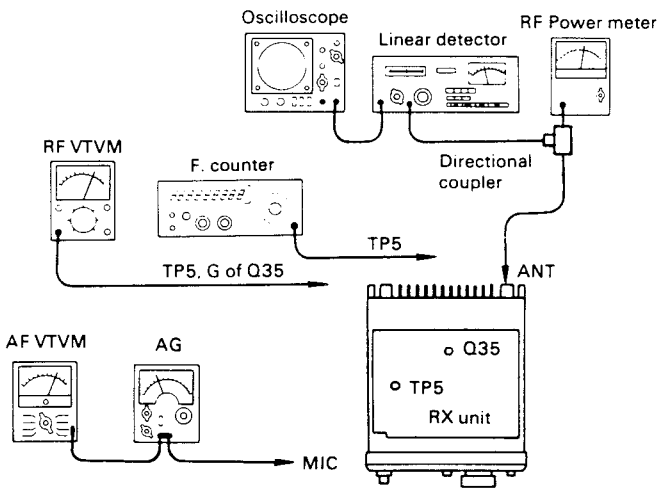

[TX] 10.695 MHz, VCT, Drive, Deviation

   2) Connect RF VTVM to Q35 (3SK74) D and place the unit in transmit mode.
   3) Adjust L23, L24, L25 and L26 for maximum signal. Repeat twice. Nominal reading is 2 ~ 3V.
3. Drive adjustment
   1) Connect the DO terminal and transmit at 147.000 (K type), 145.000 (W, T type).
   2) Adjust TC2 and TC3 for maximum current drain (approx. 31W).
   3) Using a spectrum analyzer, adjust VR4 for minimum ±10.7 MHz spurious, (VR4 adjusting range: 11 o'clock).
4. Deviation adjustment
   1) Connect to a linear detector.
   2) Set frequency to 147.000 (K type), 145.000 (W, T type) in transmit mode and apply a signal of 1 kHz, 40 mV to the MIC terminal.
   3) Adjust VR3 for 5.0 kHz of deviation.
   4) Adjust the AG output level for 3.5 kHz deviation. Check that it is less than 4 mV.

[RX]

1. Helical adjustment
   1) Connect to a sweep generator.
   2) Unplug the LR connector (any frequency)
   3) Adjust L1, L2 and L3 to obtain the waveform shown below.
   (Adjust so the 144.0 (K type) marker comes to the edge of the helical waveform.)
   (Adjust so the 145.0 (W, T type) marker comes to the center of the helical waveform.)

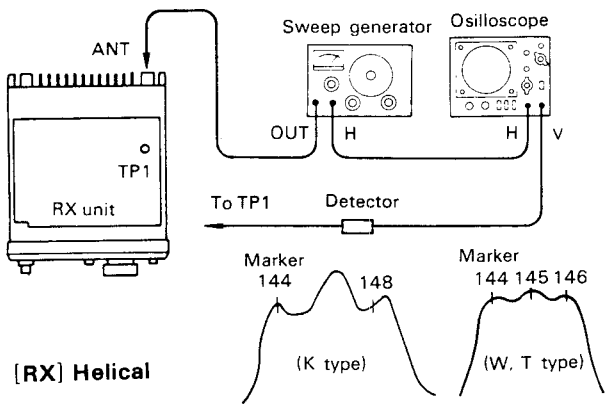

[RX] Helical

2. IF adjustment
   1) Connect a DC voltmeter, 3V range, to TP3. Reconnect the LR terminal.
   2) Set frequency to 146.100 (K type), 145.100 (W, T type) and adjust SSG for 10 dBμ output (1 kHz, 5 kHz dev.)
   3) Adjust L5, L4 and L6 for a maximum meter indication.
   4) Adjust L12 for maximum AF output with best waveform.

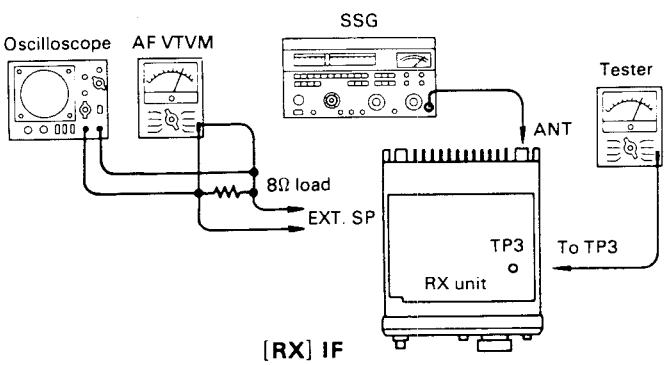

[RX] IF

3. MB voltage adjustment
   1) Connect a DC voltmeter, 6V range, to the harness connector MB terminal. Turn the volume control power SW OFF.
   2) Adjust VR2 for 5.0V.
4. LED meter adjustment (RX)
   1) Set SSG to 0 dBμ and adjust VR1 so that one LED lights.
   2) Check that all LEDs go off at −2 dBμ of SSG input.
   3) Check that 5 LEDs light at 20 dBμ (+10 dB, −2 dB) of SSG input.

ADJUSTMENTS

5.-a Tone frequency adjustment (W type)

1) Connect frequency counter to the cathode of D26 on the RX unit. Unplug the DO terminal.
2) Press the tone switch (set in transmit mode) and adjust VR5 to oftain 1750 ±10 Hz.

5.-b Tone burst frequency adjustment (T type)

1) Connect frequency counter to the cathode of D26 on the RX unit.
2) Press the tone switch (in receive mode) and adjust VR5 to obtain 1750 ±10 Hz.
3) Set in transmit mode and adjust VR6 to obtain modulation within about 0.7 sec.

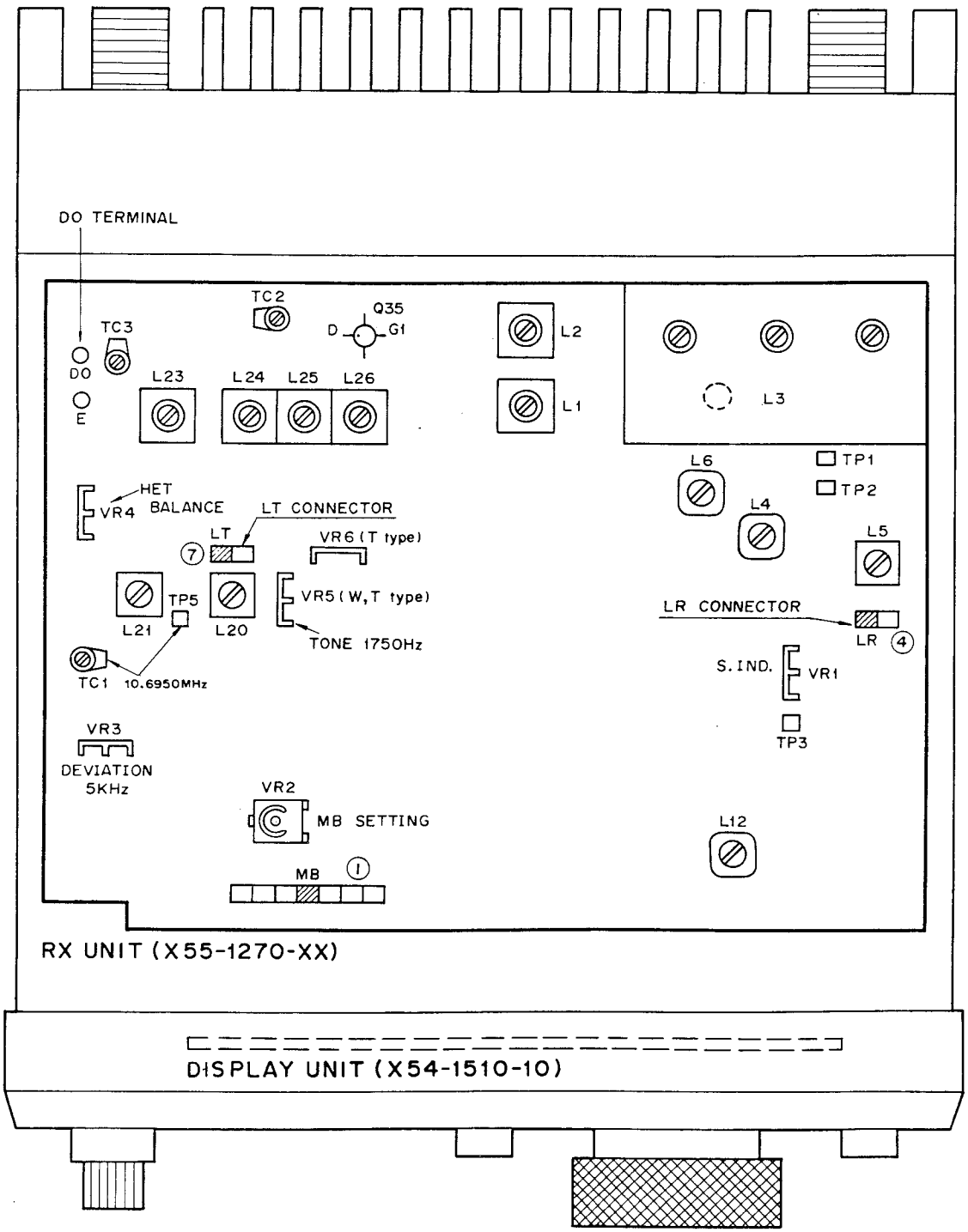

ADJUSTMENTS

FINAL UNIT (X45-1150-10) ADJUSTMENT

1. Protection NULL adjustment (TXmode)
   1) Set frequency to 147.000 MHz, HI/LO switch to HI power. Connect DC voltmeter (3V range) to TP1.
   2) Adjust VR2 for a minimum voltage (less than 0.7V).
2. High power output check (TX mode)
   1) Set frequency to 147.000 MHz, HI/LO switch to HI power. Check that total current is less than 6.5A and output is greater than 28W.
   2) Check that output at the band edges (139.900 MHz and 148.995 MHz: K type, 144.000 MHz and 145.995 MHz: W, T type) is within ±3W of the output at 147.000 MHz and total current is less than 6.5A.
3. Low power and LED meter adjustment (TX mode)
   1) Set frequency to 147.000 MHz, HI/LO switch to LO power. Adjust VR4 for 12W output.
   2) Adjust VR1 so that 4th LED (red) disappears.
   3) Adjust VR4 for 5W output ±0.5W.
   4) Check that output at 143.900 MHz and 148.995 MHz is 5W within ±2W.
   5) Place the HI/LO switch to HI and check that 5 LEDs light.
4. Protection adjustment (TX mode)
   1) Set frequency to 147.000 MHz, HI/LO switch to HI. Open the ANT terminal (disconnect the load).
   2) Connect a DC voltmeter (12V range) to TP2. With VR3 turned fully counterclockwise, the meter should indicate about 12V. Clockwise adjustment reduces the voltage from about 12V to 6V. Adjust VR3 clockwise approx. 60° from this point and check that the voltage is 5.0 — 6.0V and total current is less than 3A.

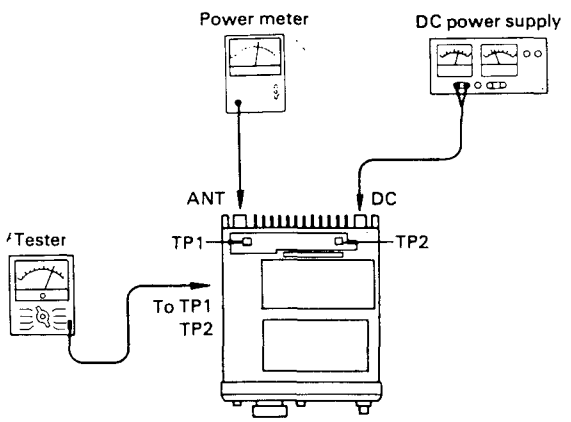

[TX] FINAL unit, Protection

PLL UNIT (X50-1650-10) ADJUSTMENT

1. IF adjustment (RX mode)
   1) Set frequency to 148.995 MHz and connect RF VTVM to TP3.
   2) Adjust L11, L6 and L5 for maximum (greater than 0.5V).
2. Lock voltage adjustment (RX mode)
   1) Set frequency to 148.995 MHz (K type), 144.000 MHz (W, T type) and connect a DC voltmeter to TP2.
   2) Adjust TC1 in the VCO shielded compartment to 7.0V (K type), 2.0V (W, T type).
   3)-a Reset frequency to 144.000 MHz and check that the voltage at TP2 is greater than 1.9V (K type).
   3)-b Reset frequency to 145.995 MHz and check that the voltage at TP2 is 3 ~ 3.5V (W, T type).
3. Output adjustment (TX mode)
   1) Set frequency to 147.000 MHz (K type), 145.000 MHz (W, T type) and connect an RF VTVM to TP1.
   2) Adjust L4 for maximum signal (0.2V).
4. Frequency adjustment (RX mode)
   1) Set frequency to 144.000 MHz and connect a frequency counter to TP1.
   2) Adjust TC2 for 133.305 MHz ±100 Hz.
   3) Reset frequency to 144.005 MHz.
   4) Adjust VR1 for 133.310 MHz ±100 Hz.

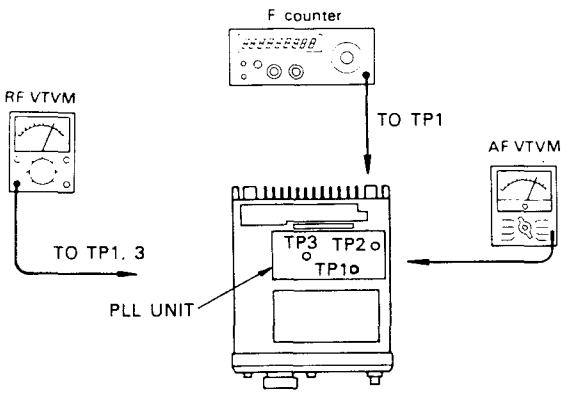

[RX] PLL

CONTROL UNIT (X53-1180-10) ADJUSTMENT K TYPE ONLY

1. Touch tone deviation adjustment (TX mode)
   1) First perform the RX unit Deviation Adjustment in Item 4. After this adjustment, transmit and depress the "5" key.
   2) Adjust VR1 for 3 ~ 3.5 kHz deviation.
   (L_1: Adjustment is not needed.)

ADJUSTMENTS

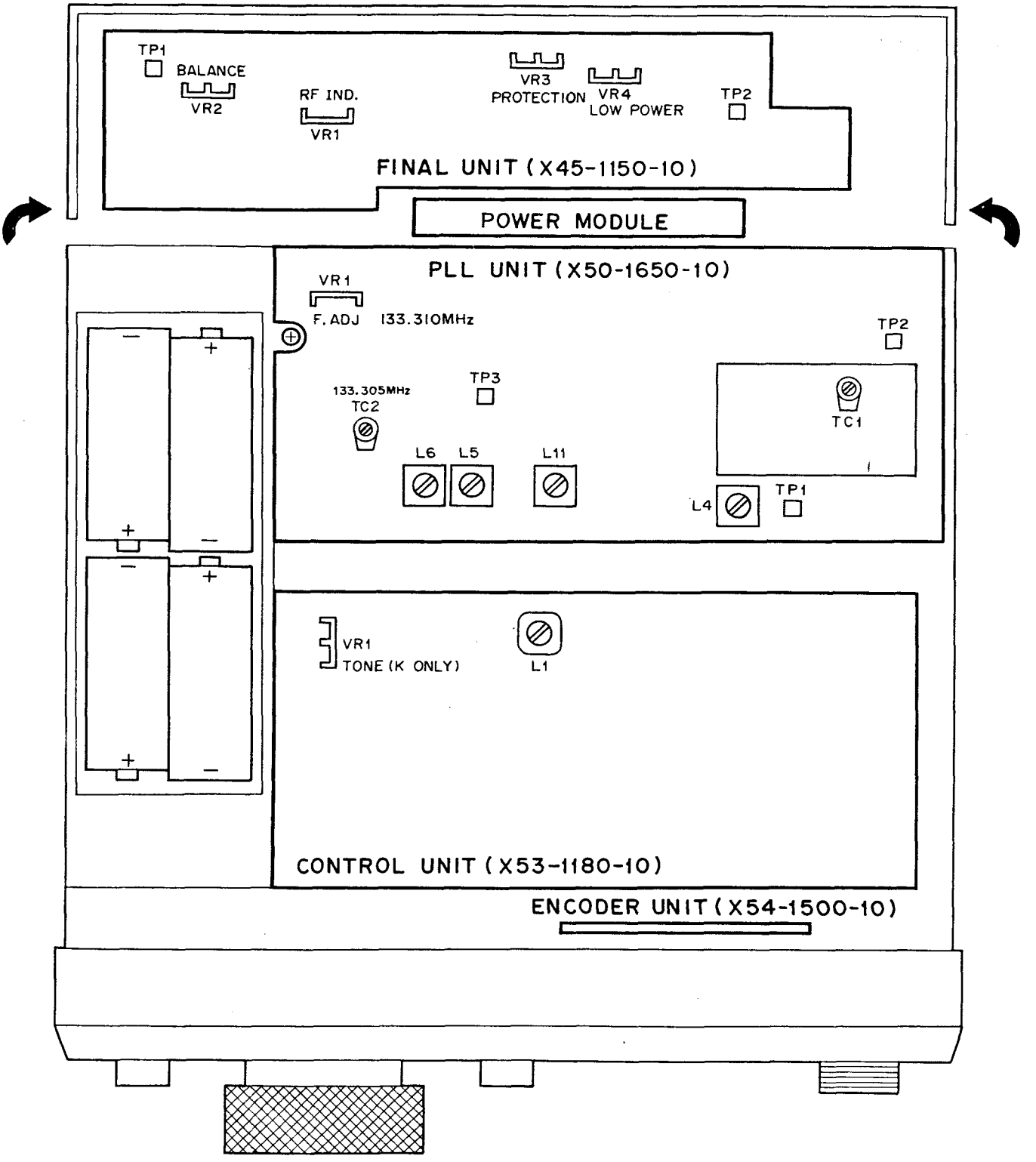

OPERATIONAL CHECKS (K type)

1. Depress the ▟ key.
   1) The orange ◄ LED will light.
   2) Enter frequency.
      a) The 4-digit frequency display will indicate 3 — 8 MHz.
      When the MHz digit is 3, only 9 should enter as a 100 kHz digit.
      When the 0 — 4 key is pressed, 0 enters as the 1 kHz digit.
      When the 5 — 9 key is pressed, 5 enters as the 1 kHz digit.
      b) After the full 4-digit frequency is entered, the yellow S (Simplex) LED will light.
   3) Selecting the TX OFFSET mode.
      a) The offset mode will enter when the "+", "—" or "S" keys are pressed between the frequency range of 4.000 to 7.995.
      b) Only the S mode should enter above or below this range.
   4) REV SW check
      a) Set frequency to 4.500 and press the "+" key.
      b) Press the REV key. The display should indicate 5.100 and the offset mode should indicate "+".
      c) Release the REV key. The display should again indicate 4.500 "—".
      d) Press the REV key. The display should indicate 4.500, S. The beeper will sound.
   5) "C" key check
      a) The display should indicate 4.500 S.
      b) Enter half frequency in the display.
      c) Press the "C" key. The display should return to 4.500 S.
   6) Memory channel selector check
      a) Turn the memory channel selector to the right. The channel display will continuously count from 0 to 14 in endless sequence.
      b) Turn the memory channel selector to the left. The channel display will count down from 14 to 0 in endless sequence.
   7) "M" key check
      a) When the memory channel selector is channel in 0 or 14 (K type) (channel 13 or 14W type).
         (1) Set frequency to 3.950.
         (2) Press the "M" key. The beeper will pulse.
         (3) Set TX frequency to 8.500.
         (4) Press the "M" key again. The display will indicate 3.950 and the beeper will stop sounding.
      b) When the memory channel selector is 0 channel 1 — 13 (K type) (channel 0 — 12W type)
         (1) Set frequency to 4.270 and TX offset to "+".
         (2) Press the "M" key and the beeper will sound.
         (3) Set frequency to 4.270 and the TX offset to "—"
         (4) The beeper will stop when the "M" key is pressed.
   8) "SC" key check
      a) Press the "SC" key. The radio will scan up continuously while the squelch is closed.
      b) Open the squelch and the scan will stop momentarily. Scan will resume at approx. 6 second intervals.
      c) Scan should release when the "C" key or PTT is pressed.
      d) The scan step will change from 10 kHz to 5 kHz by using the STEP switch.
   9) UP/DOWN check
      a) Connect the UP/DOWN microphone. The radio will scan up by pressing the UP switch and down by pressing the DOWN switch. Scan will stop when both switches are depressed.
      b) The scan up and down step is determined by the STEP switch.
2. Release the M. SEL ▟ key.
   1) The orange M. SEL ► LED will light.
   2) Turn the memory channel selector. The frequency set in item 1, 7) and TX mode will display.
   3) Priority alert switch check
      a) Press the priority alert switch to open the squelch.
      b) The beeper will sound at about 6 second intervals.
   4) Priority operate switch check
      a) Press the priority operate switch and the channel display will indicate CH 0 (CH 14 for W type). The display will indicate the frequency set in item 1, 7.
      b) This operation takes precedence over other functions (except during keyboard entry).
   5) REV will operate with any memory.
   6) The SC (scan) will operate with frequencies stored in memory. All other functions are as outlined in item 1 — 8.
   7) The scan will move up or down for the channel as selected by the UP/DOWN microphone switch.
3. Transmit mode checks.
   1) Touch tone encoder check.
      a) Press the 1 — 9, 0, C, and M keys. The signal from the receive monitor should be two tone.
      b) When two keys are pressed simultaneously, check that the signal from the receive monitor is A single tone.
4. Back up function check
   a) Turn the power switch ON and OFF. Check that the display frequency is retained.
      a) When the power switch is turned OFF and ON during scan, the scan should be released.
5. 7.6V DC ±0.5V should be present at the battery case "+" terminal at power SW ON when battery is not loaded.

SCHEMATIC DIAGRAM (W) (T)

NON US

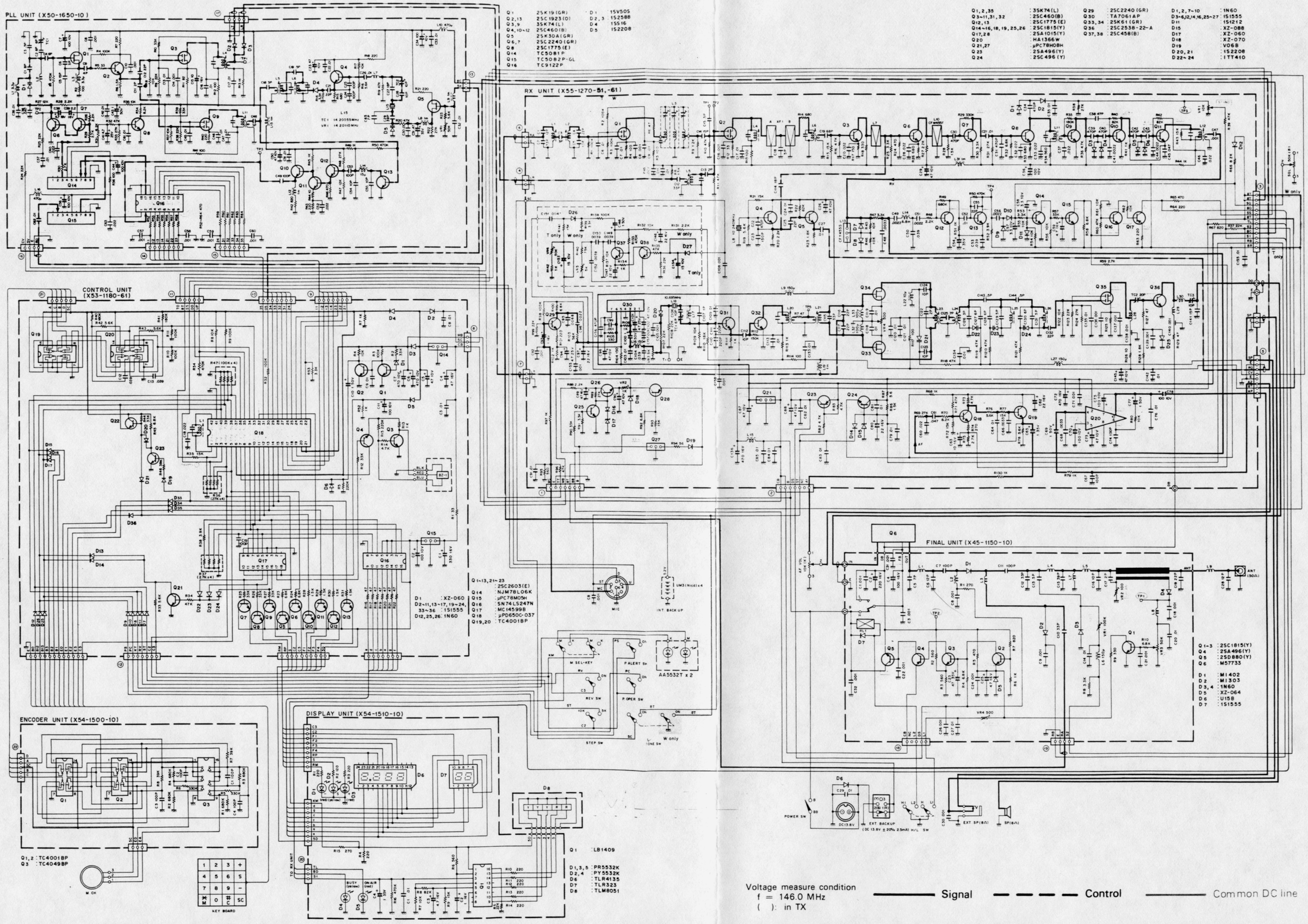

ABBREVIATIONS

PLL UNIT (X50-1650-10)

Wire harness number	Terminal	
⑯	CV	Control voltage for Vari-caps
	5V	+5 Volts
	RO	Reference oscillator 10.240 MHz
⑭	11	A
	12	B
	13	C
	14	D
		10 kHz PLL Data
	21	A
	22	B
	23	C
⑮	24	D
		100 kHz PLL Data
	31	A
	32	B
	33	C
	34	D
		10 MHz PLL Data
	35	10 MHz PLL Data
⑬	8C	+8 Common
	5K	5 kHz from CPU to turn on Q-5

CONTROL UNIT (X53-1180-10)

⑧	MB	+5.2 Memory back up voltage
	5C	+5 Common
	CB	+13.8 Common
⑨	See PLL	
⑩	See PLL	
⑪	TO	Tone out
	8T	+8 on TX
	SS	Scan stop from Q17 Low to high when Squelch open
	DO	Down signal from mic sw. Hi to low when sw push
	UP	Up signal from mic sw. Hi to low when sw push
㉑	A, B, C, D	Rotary encoder information to CPU
	5C	+5 Common
⑫	PS	When priority/operate on
	PC	Priority operation input
	KY	When MEM/Sel on
	RV	When REV on
	ST	When Step 5 kHz/10 kHz on
	C2	Common pulse output
	C3	Common reverse pulse output
	RM	Minus offset Hi when + offset
	RP	Plus offset Hi when − offset
	S	Simplex Hi when in simplex
	C2	
	C3	
	F1～F4	Main digit display drive signals
	5D	+5 for display from Q-15
	a～f	Segment drive signals

RX UNIT (X55-1270-10)

①	MC	Mic input
	TT	Touch tone signal from control unit
	MB	Memory back up +5.2
	BT	Battery terminal back up batteries
	BB	External battery back up
	B	Common +13.8
②	CB	+13.8
	B	+13.8
	DS	Diode switch +8 when TX
	ST	Ptt switch signal +8 to 0 when PTT ON
	NC	open
	A1	Top of AF VR control
③	8T	+8 in TX
	SQ	Arm of squelch VR
	BD	To LED Busy Light
	SS	Scan stop +5 when squelch open
	S2	RF level from final unit for meter
	8C	+8 common from Q-21
	S1	Smeter level signal to display
	RB	0 in TX
	8R	+8 in RX
④	LR	PLL signal local reference
⑤	SP	Speaker to external speaker
	RO	Reference oscillator 10.240 MHz
	CV	Control voltage for Varicaps
	A2	Arm of AF VR
	8T	+8 in TX
	AP	Audio output
⑥	RA	Receive antenna
⑦	LT	PLL drive for TX
	DO	Drive out to final
	SP	To internal speaker
	DB	Drive B+ 12.3 on TX

DISPLAY UNIT (X54-1510-10)

⑳	TL	Transmit light
	BD	Busy light
	S1	Smeter/power meter signal

FINAL UNIT (X45-1150-10)

	B	+13.8 when power switch on
	IN	Drive from RX unit
	DB	+12.3 for Hi power TX
	FB	B+ for hi power
	OUT	RF out
	ANT	Antenna terminal
⑱	CB	Common 13.8
	L2	Ground when in low power RL-1 on
	DS	+8 when TX diode sw line for MI 402, MI 303
	L1	Ground in low power
⑲	RB	+8 in RX
	RA	Receive antenna
	S2	RF level signal

SCHEMATIC DIAGRAM (K)

PLL UNIT (X50-1650-10)

CONTROL UNIT (X53-1180-10)

RX UNIT (X55-1270-10)

FINAL UNIT (X45-1150-10)

ENCODER UNIT (X54-1500-10)

DISPLAY UNIT (X54-1510-10)

Q1	2SK19(GR)	D1	1SV50S
Q2,13	2SC1923(O)	D2,3	1S2588
Q3,9	3SK74(L)	D4	1SS16
Q4,10~12	2SC460(B)	D5	1S2208
Q5	2SK30A(GR)		
Q6,7	2SC2240(GR)		
Q8	2SC1775(E)		
Q14	TC5081P		
Q15	TC5082P-GL		
Q16	TC9122P		

Q1,2,35	3SK74(L)	Q29	2SC2240(GR)	D1,2,7~10	1N60
Q3~11,31,32	2SC460(B)	Q30	TA7061AP	D3~6,12,14,16,25	1SS55
Q12,13	2SC1775(E)	Q33,34	2SK61(GR)	D11	1S1212
Q14~16,18,19,25,26	2SC1815(Y)	Q36	2SC2538-22-A	D15	XZ-088
Q17,28	2SA1015(Y)			D17	XZ-060
Q20	HA1366W			D18	XZ-070
Q21,27	μPC78H05H			D19	V06B
Q23	2SA496(Y)			D20,21	1S2208
Q24	2SC496(Y)			D22~24	1TT410

Q1~13,21~23	2SC2603(E)
Q14	NJM78L06K
Q15	μPC78M05H
Q16	SN74LS247N
Q17	MC14599B
Q18	μPD6500-037
Q19,20	TC4001BP
Q24~27	2SA1115(E)
Q28	MK5087N
D1	XZ-060
D2~11,13~17,19~24,	
31,32	1S1555
D12,25,26	1N60

Q1~3	2SC1815(Y)
Q4	2SA496(Y)
Q5	2SD880(Y)
Q6	M57733
D1	M1402
D2	M1303
D3,4	1N60
D5	XZ-064
D6	U15B
D7	1S1555

Q1,2	TC4001BP
Q3	TC4049BP

Q1	LB1409
D1,3,5	PR5532K
D2,4	PY5532K
D6	TLR4135
D7	TLR323
D8	TLM8051

Voltage measure condition
f = 146.0 MHz
( ): in TX

Signal — Control — Common DC line

REFERENCE DATA

<RX Sensitivity>

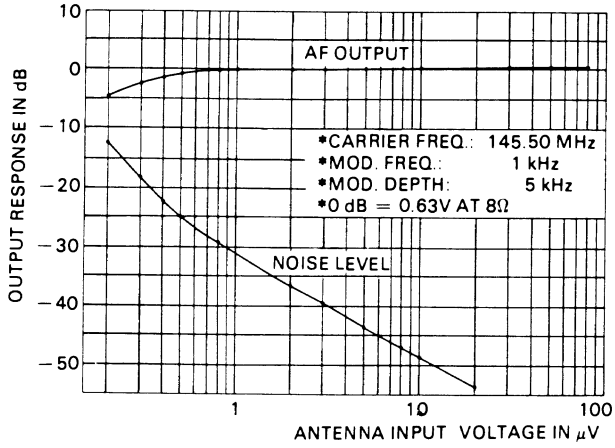

<BLOCKING>

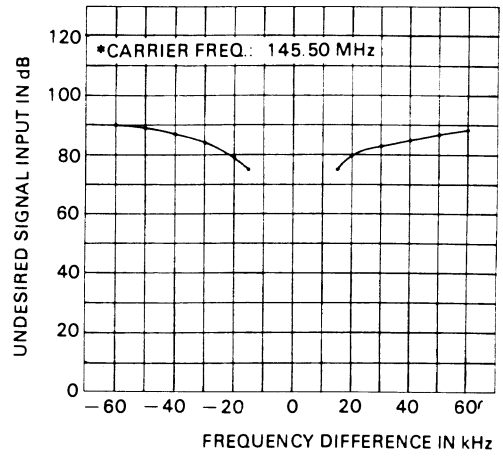

<OUTPUT POWER/CURRENT>

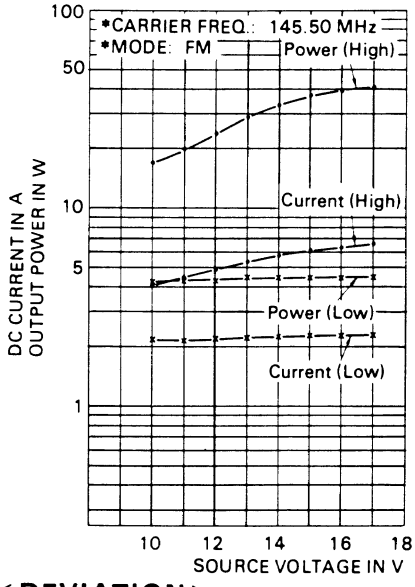

<INTER MODULATION>

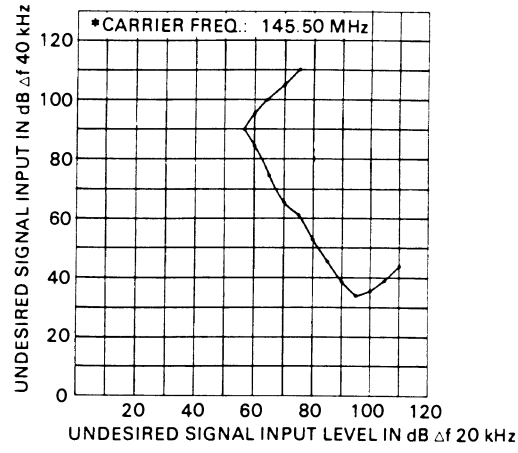

<DEVIATION>

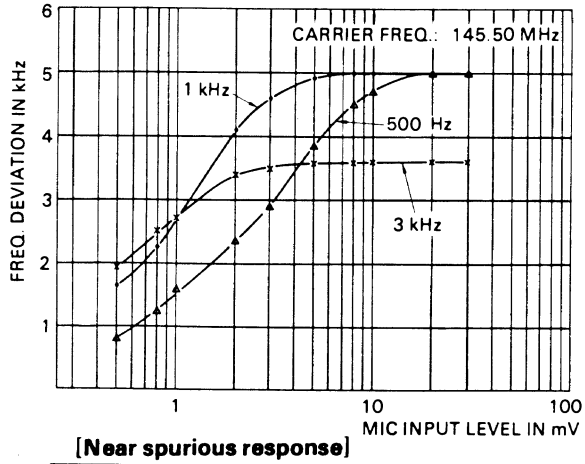

<S LEVEL SENSITIVITY>

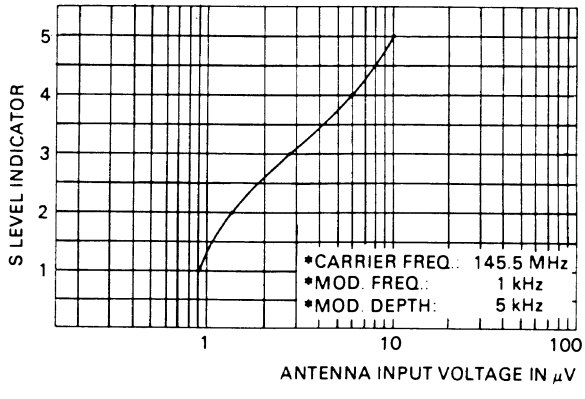

[Near spurious response]

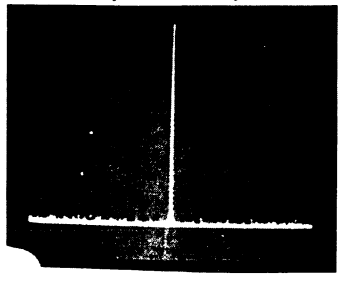

NOTE:
- CARRIER FREQ.: 146.00 MHz
- RF POWER: 30W
- SCAN WIDTH: 5 MHz/DIV
- BAND WIDTH: 10 kHz
- SCAN TIME: 0.5 SEC
- VIDEO FILTER: 10 kHz
- INPUT ATT.: 26 dB
- LOG REF LEVEL: −6 dBm
  10 dB/DIV

[Harmonics spurious response]

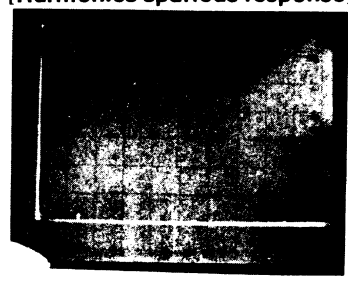

NOTE:
- CARRIER FREQ.: 146.00 MHz
- RF POWER: 30W
- SCAN WIDTH: 100 MHz/DIV
- BAND WIDTH: 100 kHz
- SCAN TIME: 10 SEC
- VIDEO FILTER: 100 Hz
- INPUT ATT.: 26 dB
- LOG REF LEVEL: −7 dBm
  10 dB/DIV

SPECIFICATIONS

[K type]

General

Semiconductors	MPU 1 ICs 19 Transistors 60 FETs 9 Diodes 77
Frequency range	144.000 to 147.995 MHz
Frequency synthesizer	Digital control, phase locked VCO
Mode	FM (F3)
Antenna impedance	50 ohms
Power requirement	13.8V DC ±15%
Grounding	Negative
Operating temperature	−20°C to +50°C
Current drain	0.4A in receive mode with no input signal 6.5A in HI transmit mode (Approx.) 3A in LOW transmit mode (Approx.) Less than 3 mA for memory back up (from power supply) Less than 2.3 mA for memory back up (from battery)
Dimensions	175 mm (6 − 7/8") wide 64 mm (2 − 1/2") high 206 mm (8-1/16") deep (Projections excluded)
Weight	2.1 kg (4.63 lbs) (approx.)

Transmitter Section

RF output power (at 13.8V DC, 50Ω load)	HI 25 Watts min. LOW 5 Watts approx. (Adjustable)
Modulation	Variable reactance direct shift
Frequency tolerance (−20°C ~ +50°C)	Less than $\pm 20 \times 10^{-6}$
Spurious radiation	HI Less than −60 dB LOW Less than −53 dB
Maximum frequency deviation (FM)	±5 kHz
Microphone	Dynamic microphone with PTT switch, 500Ω

Receiver Section

Circuitry	Double conversion superheterodyne
Intermediate frequency	1st 1F 10.695 MHz 2nd 1F 455 kHz
Receiver sensitivity	Better than 0.5μV for 30 dB S/N Better than 0.2μV for 12 dB SINAD
Receiver selectivity	More than 12 kHz (−6 dB) Less than 24 kHz (−60 dB)
Spurious response	Better than 60 dB
Squelch sensitivity	0.16μV (threshold)
Auto scan stop level	Less than 0.2μV (threshold)
Audio output	More than 2.0 watts across 8 ohm load (10% dist.)

[W, T type]

General

Semiconductors	MPU 1 ICs 18 Transistors 58 FETs 9 Diodes 78 (W), 79 (T)
Frequency range	144.000 to 145.995 MHz
Frequency synthesizer	Digital control, phase locked VCO
Mode	FM (F3)
Antenna impedance	50 ohms
Power requirement	13.8V DC ±15%
Grounding	Negative
Operating temperature	−20°C to +50°C
Current drain	0.4A in receive mode with no input signal 6.5A in HI transmit mode (Approx.) 3A in LOW transmit mode (Approtx.) Less than 3 mA for memory back up (from power supply) Less than 2.3 mA for memory back up (from battery)
Dimensions	175 mm (6 − 7/8") wide 64 mm (2 − 1/2") high 206 mm (8-1/16") deep (Projections excluded)
Weight	2.1 kg (4.63 lbs) (approx.)

Transmitter Section

RF output power (at 13.8V DC, 50Ω load)	HI 25 Watts min. LOW 5 Watts approx. (Adjustable)
Modulation	Variable reactance direct shift
Frequency tolerance (−20°C ~ +50°C)	Less than $\pm 20 \times 10^{-6}$
Spurious radiation	HI Less than −60 dB LOW Less than −53 dB
Maximum frequency deviation (FM)	±5 kHz
RPT. Tone (Burst) frequency	1,750 Hz (Burst): (T)
Microphone	Dynamic microphone with PTT switch, 500Ω

Receiver Section

Circuitry	Double conversion superheterodyne
Intermediate frequency	1st 1F 10.695 MHz 2nd 1F 455 kHz
Receiver sensitivity	Better than 0.5μV for 30 dB S/N Better than 0.2μV for 12 dB SINAD
Receiver selectivity	More than 12 kHz (−6 dB) Less than 24 kHz (−60 dB)
Spurious response	Better than 60 dB
Squelch sensitivity	0.16μV (threshold)
Auto scan stop level	Less than 0.2μV (threshold)
Audio output	More than 2.0 watts across 8 ohm load (10% dist.)

Note: Circuit and ratings are subject to change without notice due to developments in technology.

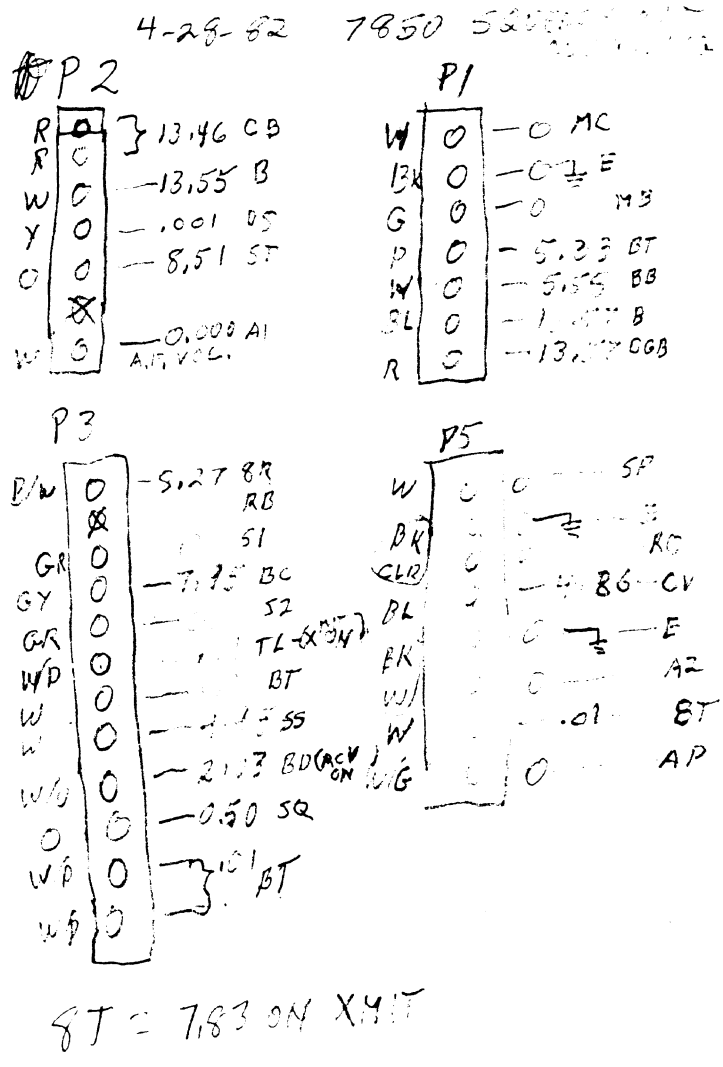

A product of

TRIO-KENWOOD CORPORATION

17-5, 2-chome, Shibuya, Shibuya-ku, Tokyo 150, Japan

TRIO-KENWOOD COMMUNICATIONS, INC.

1111 West Walnut Street Compton California 90220 U S A

TRIO-KENWOOD COMMUNICATIONS, GmbH

D 6374 Steinbach TS Industriestrasse 8A West Germany

TRIO-KENWOOD (AUSTRALIA) PTY. LTD.

30 Whiting Street Artarmon Sydney N S W Australia 2064

1981-1 Printed in Japan B51-0906-20 (K) (W) (T) 1000 ⓖ

KENWOOD®

SERVICE MANUAL

Model TR-7850

VHF FM TRANSCEIVER

A product of
TRIO-KENWOOD CORPORATION
17-5, 2-chome, Shibuya, Shibuya-ku, Tokyo 150, Japan

TRIO-KENWOOD COMMUNICATIONS, INC.
1111 West Walnut Street, Compton, California 90220, U.S.A.
TRIO-KENWOOD COMMUNICATIONS, GmbH
D-6374 Steinbach TS, Industriestrasse 8A, West Germany
TRIO-KENWOOD (AUSTRALIA) PTY. LTD.
30 Whiting Street, Artarmon, Sydney N.S.W. Australia 2064

USE THIS SERVICE MANUAL
TOGETHER WITH THAT OF TR-7800.

CONTENTS

BLOCK DIAGRAM 2
PC BOARD VIEW
FINAL UNIT (X45-1180-10) 2
PARTS LIST 3
SEMICONDUCTOR DATA 4
ADJUSTMENTS 5
SCHEMATIC ABBREVIATION 6
SCHEMATIC DIAGRAM (K)(M) 7
SCHEMATIC DIAGRAM (W)(T) ..... BACK COVER

SPECIFICATIONS

[General]

Semiconductors	MPU 1 ICs 18 (W)(T), 19 (K)(M) Transistors 58 (W)(T), 60 (K)(M) FETs 9 Diodes 79 (K)(M)(T), 78 (W)
Frequency range	144.000 to 145.995 MHz (W)(T) 144.000 to 148.995 MHz (K)(M)
Frequency synthesizer	Digital control, phase locked VCO
Mode	FM (F3)
Antenna impedance	50 ohms
Power requirement	13.8V DC ±15%
Grounding	Negative
Operating temperature	−20°C to +50°C
Current drain	0.4A in receive mode with no input signal 9A in HI transmit mode (Approx.) Less than 3 mA for memory back up (from an external power supply through the BACK UP terminal) Less than 2 mA for memory back up (from battery)
Dimensions	175 mm (6-7/8") wide 64 mm (2-1/2") high 220 mm (8-5/8") deep (projections excluded)
Weight	2.2 kg (4.84 lbs) (approx.)

[Transmitter Section]

RF output power (at 13.8V DC, 50Ω load)	HI 40 Watts min. LOW 1 to 15 watts approx. (According to FREQ.)
Modulation	Variable reactance direct shift
Frequency tolerance (−20°C~ +50°C)	Less than $\pm 20 \times 10^{-6}$
Spurious radiation	HI Less than −60 dB LOW Less than −53 dB
Maximum frequency deviation (FM)	±5 kHz
RPT. Tone burst frequency	1,750 Hz
Microphone	Dynamic microphone with PTT switch, 500Ω

[Receiver Section]

Circuitry	Double conversion superheterodyne
Intermediate frequency	1st IF 10.695 MHz 2nd IF 455 kHz
Receiver sensitivity	Better than 0.5 μV for 30 dB S/N Better than 0.2 μV for 12 dB SINAD
Receiver selectivity	More than 12 kHz (−6 dB) Less than 24 kHz (−60 dB)
Spurious response	Better than 60 dB
Squelch sensitivity	0.16 μV (threshold)
Auto scan stop level	Less than 0.2 μV (threshold)
Audio output	More than 2.0 watts across 8 ohm load (10% dist.)

Note: Circuit and ratings are subject to change without notice due to developments in technology.

© 1981-4 PRINTED IN JAPAN
B51-0936-00 (K)(M)(W)(T) 1000 Ⓖ

BLOCK DIAGRAM (K) / PC BOARD VIEW

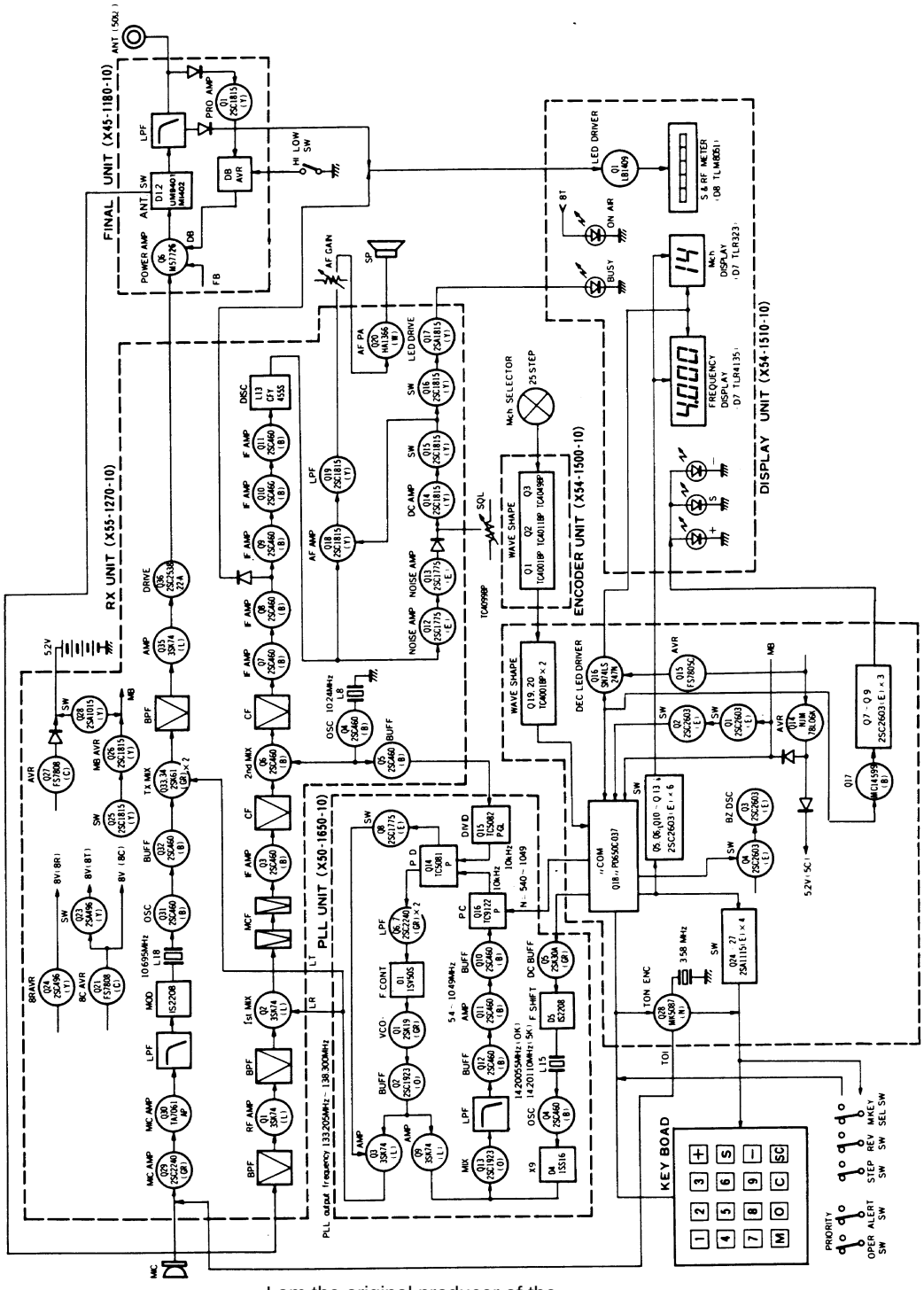

I am the original producer of the PDF version of this document.

▼FINAL UNIT (X45-1180-10)

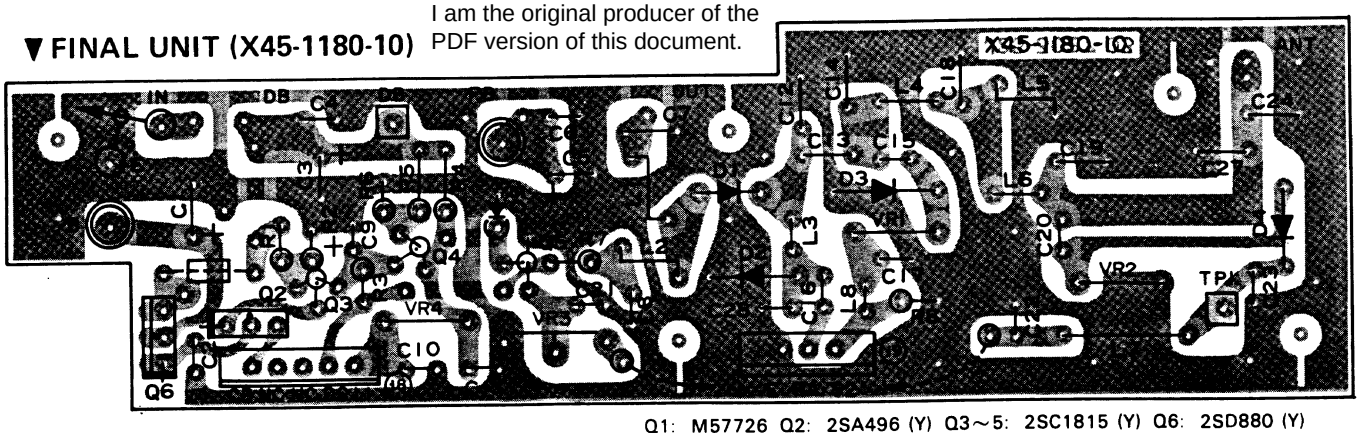

Q1: M57726 Q2: 2SA496 (Y) Q3～5: 2SC1815 (Y) Q6: 2SD880 (Y)
D1: UM9401 D2: MI402 D3: 1N60 D4: 1SS99 D5: XZ-064 D6: U15B

PARTS LIST

Note 1: Destination
(K): U.S.A
(T): Britain
(W): Europe
(M): General market

Note 2: Abbreviation

Abbreviation		Abbreviation	
Cap.	Capacitor	ML	Mylar
C	Ceramic	S	Styren
E	Electrolytic	T	Tantalum
MC	Mica		

GENERAL

☆: New Parts

Ref. No.	Parts No.	Description	Re-marks
	A01-0772-03	Case (A) Upper	
	A01-0773-03	Case (B) Lower	
	A13-0612-02	Angle ass'y (right)	
	A13-0613-02	Angle ass'y (left)	
	A13-0614-04	Angle (top)	
	A13-0625-04	Angle ass'y	
	A20-2426-03	Panel (K)(M)	☆
	A20-2427-03	Panel (W)	☆
	A20-2428-03	Panel (T)	☆
	B03-0516-04	Switch mask × 2	☆
	B05-0701-04	Speaker grill cloth	
	B05-0713-04	Grill cloth (Tone oscillator)	
	B07-0625-04	Side escutcheon × 2	
	B07-0626-03	Front escutcheon	
	B10-0628-14	Front glass	
	B42-1685-04	Switch plate (H/L)	
	B46-0058-10	Warranty card (K)	
	B50-3901-00	Operating manual (K)(M)	☆
	B50-3902-00	Operating manual (W)	☆
	B50-3903-00	Operating manual (T)	☆
	E06-0651-05	6P Metal socket (MIC)	
	E07-0252-05	2P Metal socket (DC cord ass'y)	
	E07-0651-05	6P plug (MIC)	
	E12-0001-05	Earphone plug	
	E29-0412-05	1P Connector (male) × 2	
	E29-0413-05	1P Connector (female) × 2	
	E30-1685-05	DC cord ass'y	☆
	E31-0456-05	Plug with lead (SP)	
	F05-1031-05	Fuse (10A)	
	G02-0505-05	Knob spring (AF)	
	G09-0411-05	Knob spring (SQL)	
	G13-0643-04	Cushion (battery) 96 × 25 × 10.5 mm	☆
	G53-0511-04	Packing × 8 (case)	
	H01-2750-03	Carton case (inside) (k)(W)(M)	☆
	H01-2751-03	Carton case (inside) (T)	☆
	H10-2501-03	Styrene foam cushion (upper)	
	H10-2534-12	Styrene foam cushion (lower)	
	H25-0049-03	Accessory bag	
	H25-0079-04	Protective bag (MIC)	
	H25-0103-04	Protective bag (cord)	
	H25-0106-04	Protective bag	
	J02-0069-05	Foot × 2 (small, Rear)	
	J02-0070-05	Foot × 2 (large, Front)	
	J19-1334-05	Battery case	
	J21-0392-04	Lead holder	
	J21-2504-04	Speaker mounting plate	
	J31-0514-04	Spacer collar H/L	
	J32-0745-04	Round boss × 5	
	J32-0746-04	Hex. boss	
	J42-0409-04	Knob bush H/L	
	J61-0019-05	Vinyle tie × 2	
	K21-0751-03	Main knob	
	K23-0734-04	Knob (AF)	
	K23-0735-04	Knob (SQL)	
	K27-0414-04	Push knob × 5 (Square)	
	K27-0415-04	Push knob (KEY, M. SEL)	
	K29-0734-04	Push knob HI/LOW	
	N09-0008-04	Screw × 4 (angle)	
	N09-0256-05	Ground screw × 3	
	N09-0619-05	Plastic screw × 2 (battery)	☆
	N14-0508-04	Spanner nut	
	N14-0510-04	Flange nut × 4 (angle)	
	N14-0516-05	Speed nut × 2	
	N15-1040-46	Flat washer × 4 (angle)	
	N15-1060-41	Flat washer × 4 (angle)	
	N16-0060-41	Spring washer × 4 (angle)	
	N30-2604-46	Round screw × 31	
	N30-3006-46	Screw × 2	
	N30-3008-45	Screw × 2	
	N32-2606-45	Flat screw × 5	
	N32-3006-45	Flat screw × 12	
	N33-3006-45	Round flat screw (case, etc.)	
	N99-0304-04	Allen head bolt × 4 (angle)	
	R19-9404-05	Pot. 50kΩ (B), 10kΩ (K)	
	S40-2403-05	Push switch H/L	
	S40-2415-05	Push switch (K, T, M) × 5, (W) × 4	☆
	S40-2416-05	Push switch (K, T, M) × 1, (W) × 2	☆
	S50-1406-05	Tact switch	
	S59-0406-05	Key board ass'y	
	T03-0027-15	Speaker	
	T91-0311-05	Microphone (TRIO) (T)	
	T91-0313-05	Microphone (KENWOOD) (K) (W) (M)	
	V30-1170-05	LED AA5532T	
D101,102	W01-0401-04	Allen key	
	W02-0315-05	Rotary encoder	
	X45-1180-10	Final unit	☆
	X50-1650-10	PLL unit	
	X53-1180-10	Control unit (K) (M)	
	X53-1180-61	Control unit (W) (T)	
	X54-1500-10	Encoder unit	
	X54-1510-10	Display unit	
	X55-1270-10	RX unit (K) (M)	
	X55-1270-51	RX unit (T)	
	X55-1270-61	RX unit (W)	

This scan is not authorized to be sold on eBay. If you bought this scanned manual on eBay, then the vendor you bought it from is a Thief who sold you stolen property. Please file a complaint with EBay security and demand a refund.

PARTS LIST/SEMICONDUCTOR DATA

FINAL UNIT (X45-1180-10)

Ref. No.	Parts No.	Description			Remarks
C1	C90-0820-05	E 470μF	16V		
C2	CK45B1H102K	C 0.001μF			
C3	CE04W1C101M	E 100μF	16V		
C4	CK45B1H102K	C 0.001μF			
C5	CE04W1C101M	E 100μF	16V		
C6	CK45B1H102K	C 0.001μF			
C7	CC45SL2H050C	C 5pF	±0.25pF	500V	
C8	CK45B1H102K	C 0.001μF			
C9	CS15E1VR47M	T 0.47μF	35V		
C10,11	CK45B1H102K	C 0.001μF			
C12	CC45SL2H150J	C 15pF	500V		
C13	CK45E2H102P	C 0.001μF	500V		
C14	CC45SL2H150J	C 15pF	500V		
C15	CC45CH1H010C	C 1pF	±0.25pF		
C16	CC45SL1H101J	C 100pF			
C17	CK45B1H102K	C 0.001μF			
C18	CC45SL2H390J	C 39pF	500V		
C19	CC45SL2H100D	C 10pF	±0.5pF	500V	
C20	CC45CH1H010C	C 1pF	±0.25pF		
C21～23	CK45B1H102K	C 0.001μF			
C24	CC45SL2H220J	C 22pF	500V		
C25	CC45SL2H150J	C 15pF	500V		
C26	CK45B1H102K	C 0.001μF			
C27	CC45SL2H020C	C 2pF	±0.25pF	500V	
C28	CC45CH1H070D	C 7pF	±0.5pF		
	E04-0152-05	UHF type receptacle			
	E06-0252-05	2P metal socket (Power)			
	E08-0304-05	Power jack Back up			
	E11-0403-05	Earphone jack			
	E23-0046-04	Square terminal			
	E23-0401-05	Round terminal			

Ref. No.	Parts No.	Description			Remarks
	F01-0758-05	Heat sink			☆
	F20-0078-05	Insulating board			
	F29-0014-05	Shoulder washer			
L1	L34-1020-05	Coil	φ3	3.5T	☆
L2	L34-0908-05	Coil	φ3		
L3	L34-0692-05	VHF coil	φ5	4T	
L4	L34-0742-05	Coil	φ3	5T	
L5	L34-0908-05	Coil	φ3		
L6	L34-0499-05	VHF coil	φ3	4T	
L7	L33-0026-05	Choke coil	1μH		
L8	L40-1511-03	Ferri-inductor	150μH		
L9	L34-0822-05	VHF coil	φ5	3T	
R7	RC05GF2H151J	Solid	150Ω	1/2W	
VR1	R12-4020-05	Trim. pot	50kΩ (2 poles)		
VR2	R12-0417-05	Trim. pot	100Ω (2 poles)		
VR3	R12-4016-05	Trim. pot	50kΩ (2 poles)		
VR4	R12-0053-05	Trim. pot	500Ω (2 poles)		
	R92-0150-05	Short jumper			
Q1	V30-1239-56	Power module	M57726		☆
Q2	V01-0113-05	TR	2SA496 (Y)		
Q3～5	V03-1815-06	TR	2SC1815 (Y)		
Q6	V04-0880-16	TR	2SD880 (Y)		
D1	V11-7778-16	Diode	UM9401		☆
D2	V11-5260-16	Diode	MI402		
D3	V11-0051-05	Diode	1N60		
D4	V11-1277-86	Diode	1SS99		
D5	V11-4104-20	Zener diode	XZ064		
D6	V11-6460-26	Diode	U15B		

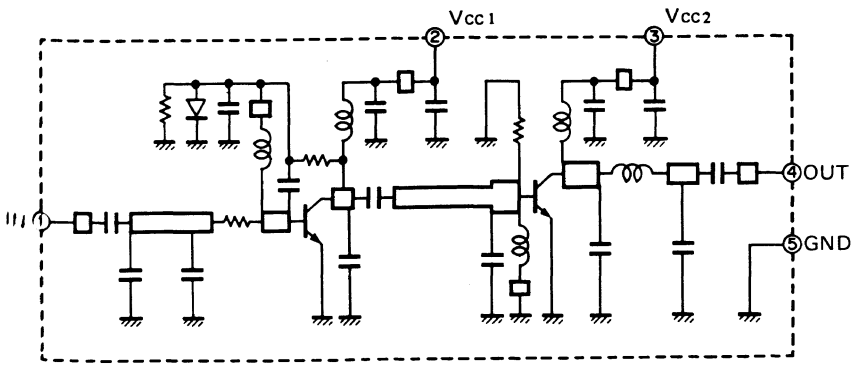

Power Module M57726 Equivalent Circuit

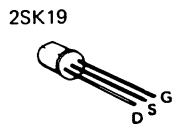

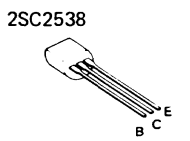

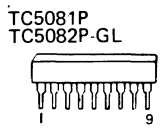

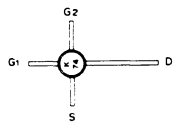

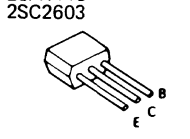

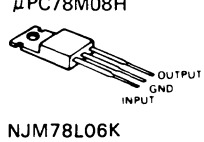

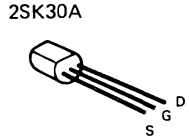

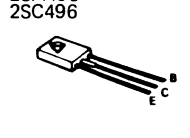

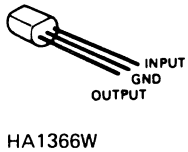

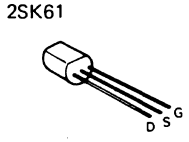

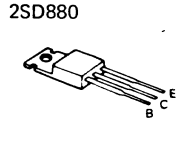

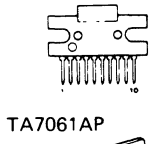

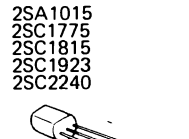

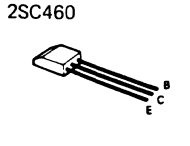

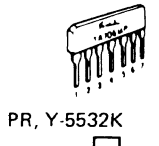

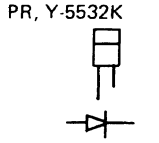

MAX Rating M57726

Item	Symbol	Tc (°C)	Rating
Operating voltage	Vcc	25	17V
DC current	Icc	25	14A
Operating case temp.	Tc (op)		−30 ～ + 110°C
Storage temp.	Tstg		−40 ～ + 110°C

Electrical characteristic M57726

Item	Symbol	Tc (°C)	Condition	Value	
				Min.	Typ.
Power output	P_o	25	Vcc = 12.5V, F = 144 ～ 148 MHz PIN = 0.4W, ZL = ZG = 50Ω	43W	47W
Total efficiency	η_T	25	Vcc = 12.5V, F = 144 ～ 148 MHz PIN = 0.4W, ZL = ZG = 50Ω	50%	54%

ADJUSTMENT

Item	Condition	Measurement			Adjustment			Specifications	Remarks
		Test equipment	Unit	Terminal	Unit	Part	Method		
1. Drive check	1) Remove the coaxial cable connected to terminal DO of the RX unit. Connect a power meter of F.S. = 3W to terminal DO f=148.00 MHz (K) f=145.995 MHz (W, T) Transmit	Power meter 3W			RX	TC2, 3	Adjust TC2 and TC3 for maximum output.	0.4~0.5W	
2. Power check	1) Center VR1, VR2 and VR4 of the final unit and turn VR3 all the way to the left. f=147.00 MHz (K) f=145.995 MHz (W, T) Connect the coaxial cable to terminal DO. Transmit	DC V.M	Final	TP1	Final	VR2	Adjust VR2 for the minimum voltage reading.	0.7V or less	
	2) Adjust the frequency to each of the following frequencies f=144.00 MHz, 146.00 MHz, 148.00 MHz (K); f=144.00 MHz, 145.995 MHz (W, T)	Power meter, DC A.M.						42W or more, 9.0A or less	Check
	3) K type only f= 148.995 MHz	Power meter						38W or more	
3. LOW power and LED meter	1) HI/LOW switch: LOW f=148.00 MHz (K) f=145.995 MHz (W, T)	Power meter			Final	VR4	Adjust VR4 for a power meter reading of 16W.		
	2) f=148.995 MHz (K) f=145.995 MHz (W, T)				Final	VR1	Adjust VR1 so that the fifth digit of the LED meter just goes off.		
	3) f=148.000 MHz (K) f=145.995 MHz (W, T)				Final	VR4	Adjust VR4 so that the power meter reads 14W (K) or 10W (W, T).		
	4) HI/LOW switch: HI.							All digits of the LED meter light.	Check
	5) HI/LOW switch: LOW f=144.000 MHz							1W or more	
4. Output power at a power supply voltage of 11V	1) Power supply votage: 11.0V HI/LOW switch: HI.	Power meter						20W or more	Check
	2) HI/LOW switch: LOW							The power meter moves to some extent.	
5. Protection	1) ANT terminal: Open Power supply voltage: 13.8V HI/LOW switch: HI f=148.000 MHz (K) f=145.995 MHz (W, T)	DC A.M.	Final	TP2	Final	VR3	Turn VR3 clockwise until the DC ammeter reads 4A.		
	2) f=143.900~148.995 MHz (K) f=144.000~145.995 MHz (W, T)							5A or less	Check
	3) Connect the power meter to the ANT terminal.	Power meter						42W or more	

SCHEMATIC ABBREVIATION

PLL UNIT (X50-1650-10)

Wire harness number	Terminal	Remarks
⑯	CV	Control voltage for Vari-caps
	5V	+5 Volts
	RO	Reference oscillator 10.240 MHz
⑭	11	A — 10 kHz PLL Data
	12	B — 10 kHz PLL Data
	13	C — 10 kHz PLL Data
	14	D — 10 kHz PLL Data
	21	A — 100 kHz PLL Data
	22	B — 100 kHz PLL Data
	23	C — 100 kHz PLL Data
⑮	24	D — 100 kHz PLL Data
	31	A — 10 MHz PLL Data
	32	B — 10 MHz PLL Data
	33	C — 10 MHz PLL Data
	34	D — 10 MHz PLL Data
	35	10 MHz PLL Data
⑬	8C	+8 Common
	5K	5 kHz from CPU to turn on Q-5

CONTROL UNIT (X53-1180-10)

⑧	MB	+5.2 Memory back up voltage
	5C	+5 Common
	CB	+13.8 Common
⑨	See PLL	
⑩	See PLL	
⑪	TO	Tone out
	8T	+8 on TX
	SS	Scan stop from Q17 Low to high when Squelch open
	DO	Down signal from mic sw. Hi to low when sw push
	UP	Up signal from mic sw. Hi to low when sw push
㉑	A	Rotary encoder information to CPU
	B	Rotary encoder information to CPU
	C	Rotary encoder information to CPU
	D	Rotary encoder information to CPU
	5C	+5 Common
⑫	PS	When priority/operate on
	PC	Priority operation input
	KY	When MEM/Sel on
	RV	When REV on
	ST	When Step 5 kHz/10 kHz on
	C2	Common pulse output
	C3	Common reverse pulse output
	RM	Minus offset Hi when + offset
	RP	Plus offset Hi when − offset
	S	Simplex Hi when in simplex
	C2	
	C3	
	F1～F4	Main digit display drive signals
	5D	+5 for display from Q-15
	a～f	Segment drive signals

RX UNIT (X55-1270-10)

①	MC	Mic input
	TT	Touch tone signal from control unit
	MB	Memory back up +5.2
	BT	Battery terminal back up batteries
	BB	External battery back up
	B	Common +13.8
	CGB	Always +13.8
②	CB	+13.8
	B	+13.8
	DS	Diode switch +8 when TX
	ST	Ptt switch signal +8 to 0 when PTT ON
	NC	open
	A1	Top of AF VR control
③	8T	+8 in TX
	SQ	Arm of squelch VR
	BD	To LED Busy Light
	SS	Scan stop +5 when squelch open
	TL	Transmit light
	S2	RF level from final unit for meter
	8C	+8 common from Q-21
	S1	S meter level signal to display
	RB	0 in TX +8.8 in RX
	8R	+8 in RX
④	LR	PLL signal local reference
⑤	SP	Speaker to external speaker
	RO	Reference oscillator 10.240 MHz
	CV	Control voltage for Varicaps
	A2	Arm of AF VR
	8T	+8 in TX
	AP	Audio output
⑥	RA	Receive antenna
⑦	LT	PLL drive for TX
	DO	Drive out to final
	SP	To internal speaker
	DB	Drive B+ 12.3 on TX

DISPLAY UNIT (X54-1510-10)

⑳	TL	Transmit light
	BD	Busy light
	S1	Smeter/power meter signal

FINAL UNIT (X45-1150-10)

	B	+13.8 when power switch on
	IN	Drive from RX unit
	DB	+12.3 for Hi power TX
	FB	B+ for hi power
	OUT	RF out
	ANT	Antenna terminal
⑱	CB	Common 13.8
	DS	+8 when TX diode sw line for UM9401, MI 402
	L1	Ground in low power
⑲	RA	Receive antenna
	S2	RF level signal

4-27-82
SQELCH NG

50K SQUELCH POT
ARM Ø TO .47 VOLTS OK

WITH P5 PLUGED IN T8 P3 = 91Ω TO GND
WITH P5 PLUG OUT T8 P3 = 1,382Ω TO GND

WITH P5 UP 1/16" AT BACK &
DOWN, AT FRONT IT
WORKS OK

SQUELCH ACTION
TAKES PLACE WHEN
BASE OF Q14 = .63V OR HIGHER
= .66 VOLTS ON ARM OF SQELCH POT. ARM.

2-2-84
INTERMITENT SQ. ACTION
WAS CAUSED BY COLD
SOLDER JOINT ON BOARD
ONE LEG OF C21

FLUKE 8.51 W LEADS
" 8.51 W/1/1 PROBE
4.47 W 10/1 PROBE

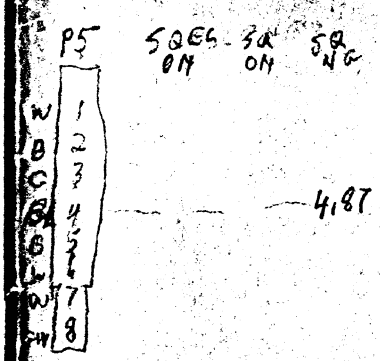

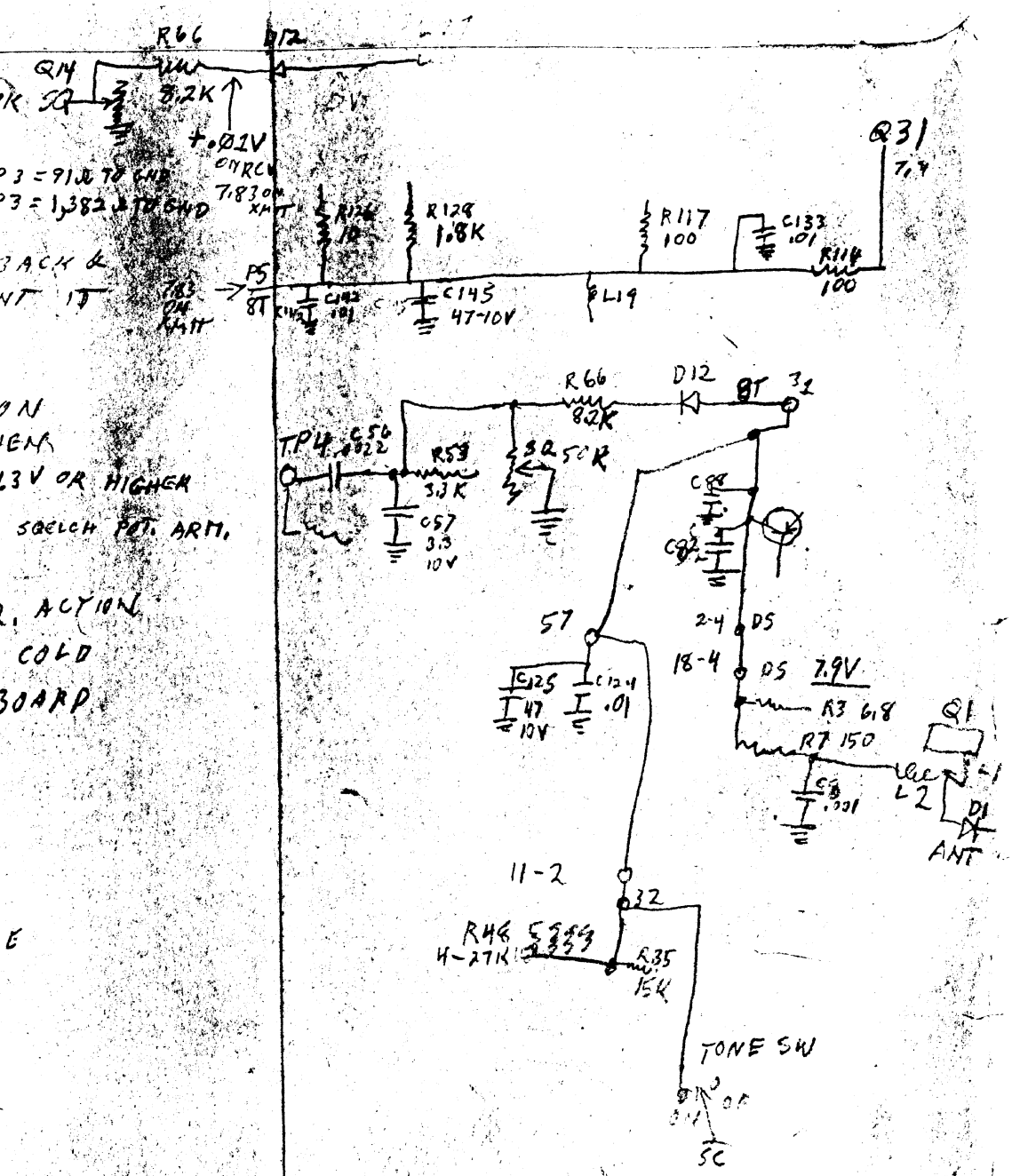

SCHEMATIC DIAGRAM (K)(M)

PLL UNIT (X50-1650-10)

RX UNIT (X55-1270-10)

CONTROL UNIT (X53-1180-10)

ENCODER UNIT (X54-1500-10)

DISPLAY UNIT (X54-1510-10)

FINAL UNIT (X45-1180-10)

Q1	: 2SK19 (GR)
Q2,13	: 2SC1923 (O)
Q3,9	: 3SK74 (L)
Q4,10~12	: 2SC460 (B)
Q5	: 2SK30A (GR)
Q6,7	: 2SC2240 (GR)
Q8	: 2SC1775 (E)
Q14	: TC5081P
Q15	: TC5082P-GL
Q16	: TC9122P
D1	: 1SV50S
D2,3	: 1S2588
D4	: 1SS16
D5	: 1S2208

Q1,2,35	: 3SK74(L)
Q3~11,31,32	: 2SC460(B)
Q12,13	: 2SC1775 (E)
Q14~16,18,19,25,26	: 2SC1815(Y)
Q17,28	: 2SA1015(Y)
Q20	: HA1366W
Q21,27	: μPC78M08H
Q23	: 2SA496(Y)
Q24	: 2SC 496 (Y)
Q29	: 2SC2240 (GR)
Q30	: TA7061AP
Q33,34	: 2SK61 (GR)
Q36	: 2SC2538-22-A
D1,2,7~10	: 1N60
D3~6,12,14,16,25	: 1S1555
D11	: 1S1212
D15	: XZ-088
D17	: XZ-060
D18	: XZ-070
D19	: V06B
D20,21	: 1S2208
D13,22~24	: 1TT410

Q1~13,21~23	: 2SC2603(E)
Q14	: NJM78L06K
Q15	: μPC78M05H
Q16	: SN74LS247N
Q17	: MC145998
Q18	: μPD6500-037
Q19,20	: TC4001BP
Q24~27	: 2SA1115(E)
Q28	: MK5087N
D1	: XZ-060
D2~11,13~17,19~24, 31,32	: 1S1555
D12,25,26	: 1N60

Q1,2	: TC4001BP
Q3	: TC4049BP

Q1	: LB1409
D1,3,5	: PR5532K
D2,4	: PY5532K
D6	: TLR4135
D7	: TLR323
D8	: TLM8051

Q1	: M57726
Q2	: 2SA496(Y)
Q3~5	: 2SC1815(Y)
Q6	: 2SD880(Y)
D1	: UM9401
D2	: MI402
D3	: 1N60
D4	: 1S599
D5	: XZ-064
D6	: U15B

Voltage measure condition
f=146.0 MHz
( ): in TX

Signal ------- Control ——— Common DC line

SCHEMATIC DIAGRAM (W)(T)

Q1	: 2SK19 (GR)	D1	: 1SV50
Q2,13	: 2SC1923 (O)	D2,3	: 1S2581
Q3,9	: 3SK74 (L)	D4	: 1SS16
Q4,10~12	: 2SC460 (B)	D5	: 1S2209
Q5	: 2SK30A (GR)		
Q6,7	: 2SC2240 (GR)		
Q8	: 2SC1775 (E)		
Q14	: TC5081P		
Q15	: TC5082P-GL		
Q16	: TC9122P		

Q1,2,35	: 3SK74 (L)	Q29	: 2SC2240 (GR)	D1,2,7~10	: 1N60
Q3~11,31,32	: 2SC460 (B)	Q30	: TA7061AP	D3~6,12,14,16,25~27	: 1S1555
Q12,13	: 2SC1775 (E)	Q33,34	: 2SK61 (GR)	D11	: 1S1212
Q14~15,18,19,25,26	: 2SC1815 (Y)	Q36	: 2SC2539-22-A	D15	: XZ-088
Q17,28	: 2SA1015 (Y)	Q37,38	: 2SC458 (B)	D17	: XZ-060
Q20	: HA1366W			D18	: XZ-070
Q21,27	: μPC78M08H			D19	: V06B
Q23	: 2SA496 (Y)			D20,21	: 1S2208
Q24	: 2SC496 (Y)			D13,22~24	: 1TT410

PLL UNIT (X50-1650-10)

CONTROL UNIT (X53-1180-61)

RX UNIT (X55-1270-51,-61)

FINAL UNIT (X45-1180-10)

ENCODER UNIT (X54-1500-10)

DISPLAY UNIT (X54-1510-10)

Q1,2	: TC4001BP
Q3	: TC4049BP

Q1	: LB1409
D1,3,5	: PR5532K
D2,4	: PY5532K
D6	: TLR4135
D7	: TLR323
D8	: TLM8051

Q1~13,21~23	: 2SC2603 (E)
Q14	: NJM78L06K
Q15	: μPC78M05H
Q16	: SN74LS247N
Q17	: MC145998
Q18	: μPD6500-037
Q19,20	: TC4001BP

D1	: XZ-060
D2~11,13~17,19~24, 33~36	: 1S1555
D12,25,26	: 1N60

Q1	: M57726
Q2	: 2SA496 (Y)
Q3~5	: 2SC1815 (Y)
Q6	: 2SD880 (Y)
D1	: UM9401
D2	: MI402
D3	: 1N60
D4	: 1S599
D5	: XZ-064
D6	: U15B

Voltage measure condition
f=146.0 MHz
( ): inTX

Signal ------ Control ——— Common DC line

146.00 - 145.975 MC

TR-7850 (T,W)

AA4DF's Radio/Electronics Site

[Free Download Sites]	Links to Where Unscrupulous Vendors Acquire "Their" Manuals!
[Tektronix, HP, Fluke, Wavetek, Etc.]	Best Pricing on High Quality Technical Manuals!
[Free Downloads]	Current Free Download(s) Available
[For Sale/Trade]	Other-Than-Manual Sale/Trade Items
[FTP Manual Trades]	Manuals Needed & Manuals Offered (FTP)
[Radio Equipment & Other Manuals]	Radio Equipment and Other Manuals Available
[Broadcast TV/Radio Manuals]	Broadcast/Video Service/Ops Manuals Available
[Consumer Electronics Manuals]	Consumer Electronics Service/Ops Manuals Available
[Pager Manuals]	Pager Service/Programming Manuals Available
[Tektronix 7000 Series]	60 Volume Plug-In Manuals Set!
[Amateur Radio Manuals]	Ham Radio Manuals by FTP
[Amateur Radio Manuals]	Ham Radio Manuals on CD
[Amateur Radio Manuals]	Large Collections on CD and DVD
[Thousands of Scanned Manuals!]	Big Buck$ Distributing $canned Manual$ on eBay!! NEW!
[Some Tech Links]	Links to Technical Sites
[Manufacturers]	Manufacturer Addresses and Telephone Numbers
[TK-860H]	Schematic and Software to Program Radio
[Wavetek 3001 PLLs]	PA0KEP's Wavetek 3001 PLL Frequency Plan
[CT-Systems 3000B Mods]	Wavetek/CT-Systems 3000B Information
[The XYL]	Why AA4DF Is Such A Happy Fellow!

Comments? Email AA4DF